Section 1 General Information, Lubrication and Maintenance

TABLE OF CONTENTS

Abbreviations 1-9
About Your Manual 1-2
Carbon Monoxide 1-2
Component Identification 1-4
Crankcase Depression Regulator (CDR) Valve and Hose Replacement 1-50
Engine Oil Cooler Supply and Return Lines Maintenance . . . 1-47
Engine Oil Dipstick Tube Replacement 1-44
Engine Oil Filler Tube Maintenance 1-45
Engine Oil Filter Adapter Maintenance 1-45
Engine Oil Service 1-46
Engine/Transmission Oil Cooler Assembly Replacement . . . 1-49
Environmental Protection Agency (EPA) Noise Emission Control Information Label 1-3
Equipment/Publication Recommendations 1-2
General Maintenance Information 1-35
HUMMER Service Hotline 1-2
Jump Starting 1-41
Lubrication and Maintenance Items
Steering and Suspension Lubrication Points 1-31
Universal and Slip Joint Lubrication 1-30
Lubrication Locations and Schedules 1-28
Oil Pan Maintenance 1-46
Raising and Supporting the Vehicle 1-38
Recommended Maintenance Schedule 1-35
Safety Certification Decal 1-3
Specifications 1-7
The Metric System and Equivalents 1-10
Torque Limits 1-11
Towing 1-40
Unscheduled Maintenance 1-37
VIN System Identification 1-4

SAFETY SUMMARY

Individuals who decide to perform their own repairs should have some training and limit repairs to components which could not affect the safety of the vehicle or its occupants.

When replacement parts are required, it is strongly recommended that they are purchased through an authorized HUMMER dealer. It is essential that replacement parts meet or exceed manufacturer's specifications. Vehicle performance and personal safety may be impaired if other than original factory components are installed.

The installation of nonapproved accessories or conversions is not recommended as they could affect the vehicle's driving characteristics and personal safety. AM General Corporation will not be liable for personal injury or damage to property resulting from the installation of nonapproved accessories or conversions to the HUMMER.

Following the safety precautions as prescribed throughout this manual may greatly reduce the risks of personal injury and damage to the vehicle. However, it is unlikely that AM General Corporation will account for all possibilities.

Warnings, cautions, and notes are used throughout this service manual to assist service personnel in the performance of maintenance actions. These statements are designed as reminders for trained and experienced service personnel.

WARNINGS — Indicate potential safety hazards and must be followed to avoid personal injury. Warnings appear as follows:

WARNING: To avoid injury, do not remove surge tank filler cap before depressurizing cooling system when engine temperature is above 190° F (88° C).

CAUTIONS — Indicate potential equipment damage, and must be followed to avoid damage to components or systems. An example of a caution is shown below:

***CAUTION**: To avoid starter damage, do not operate starter continuously for more than 20 seconds. Wait 10 to 15 seconds between periods of operation.*

NOTES — Indicate methods or actions that may simplify vehicle maintenance or help maintain vehicle performance. An example of a note is shown below:

NOTE: Clean all components, examine for wear or damage, and replace if necessary.

Adventure Accessories
Hummer Parts Specialists 1-800-HUMMER-9

CARBON MONOXIDE

WARNING: Carbon monoxide (exhaust gases) can be fatal.

WARNING: Brain damage or death can result from heavy exposure to carbon monoxide. The following precautions must be followed to ensure personal safety.

1. Do not operate vehicle engine in enclosed areas. Do not idle the vehicle engine with vehicle windows closed. Be alert at all times for exhaust odors. Be alert for exhaust poisoning symptoms. They are:
   - Headache
   - Dizziness
   - Sleepiness
   - Loss of muscular control
2. If you see another person with exhaust poisoning symptoms:
   - Remove person from area
   - Expose to open air
   - Keep person warm
   - Do not permit physical exercise
   - Administer artificial respiration, if necessary
   - Notify medical personnel

The best defense against exhaust poisoning is adequate ventilation.

ABOUT THIS MANUAL

This service manual contains instructions for maintaining the 1995 commercial HUMMER. Spend some time looking through this manual. Features to improve the usefulness of this manual and increase your efficiency are:

Accessing Information - These include physical entry features, such as tabulated sections for quick reference and extensive troubleshooting guides for specific systems that lead directly to step-by-step directions for problem solving and maintenance tasks.

Illustrations - A variety of methods are used to make locating and repairing components easy. Locator illustrations, exploded views, and cut-away diagrams make the information in this manual easy to understand.

The service manual is the best source available for providing information and data critical to vehicle operation and maintenance. In this manual you will find the following information:

- Safety Summary
- General Information
- General Maintenance Procedures
- Detailed Maintenance Procedures
- Torque Ranges
- Wiring Diagrams and Schematics

EQUIPMENT/PUBLICATION RECOMMENDATIONS

AM General Corporation encourages HUMMER owners and service personnel to help improve the vehicle and these publications by submitting their recommendations. All recommendations will be answered in writing. To submit a recommendation, please write to:

AM General Corporation
Commercial Publications Department
31744 Enterprise Drive
P.O. Box 3330
Livonia, Michigan 48151-3330

Revisions

In order to receive future revisions to this service manual, please write to:

AM General Corporation
Commercial Publications/Customer Service
408 South Byrkit Avenue
P.O. Box 728
Mishawaka, Indiana 46544-0728

Please be sure to specify publication number 05714160.

HUMMER SERVICE HOTLINE

Problems often arise during maintenance performance. If solutions cannot be found in this service manual, please call the **AM General Hummer Service Hotline** at:

1-800-732-5493 (1-800-REAL 4WD)

Adventure Accessories
HummerHQ Parts.com 1-800-HUMMER-9

SAFETY CERTIFICATION DECAL

The safety certification decal is located on the driver's side B-pillar. The decal is required by the National Highway Traffic Safety Administration and includes a self-destructive, tamper-proof feature. If the decal is tampered with, a void pattern will appear across the decal (Figure 1-1).

The decal contains the name of the manufacturer, the month and year the vehicle was manufactured, the certification statement, the vehicle identification number (VIN), and the vehicle model type. It also contains the Gross Vehicle Weight Rating (GVWR), Gross Axle Weight Ratings (GAWR), and wheel and tire information. For more information on the GVWR and GAWR, refer to "VEHICLE LOADING INFORMATION" in the Hummer Owner's Manual.

ENVIRONMENTAL PROTECTION AGENCY (EPA) NOISE EMISSION CONTROL INFORMATION LABEL

The EPA noise emission control information label is located on the passenger's side B-pillar rabbet assembly. The label is required by the EPA and includes a self-destructive, tamper-proof feature. If the label is tampered with, a void pattern will appear across the label. Notify the dealer or the manufacturer if the label is missing or displays a void pattern (Figure 1-2).

The label contains the name of the manufacturer, the month and year the vehicle was manufactured, a statement regarding vehicle conformance to applicable U.S. EPA regulations, and a description of acts prohibited by the Noise Control Act of 1972.

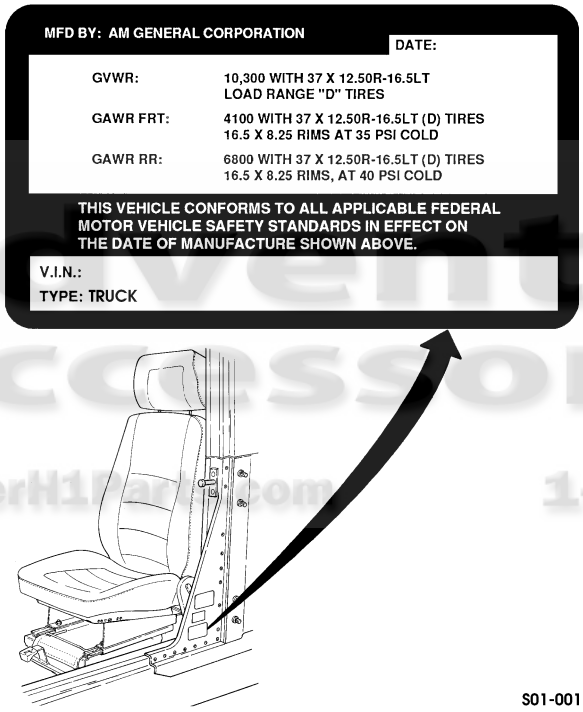

Figure 1-1: Safety Certification Decal

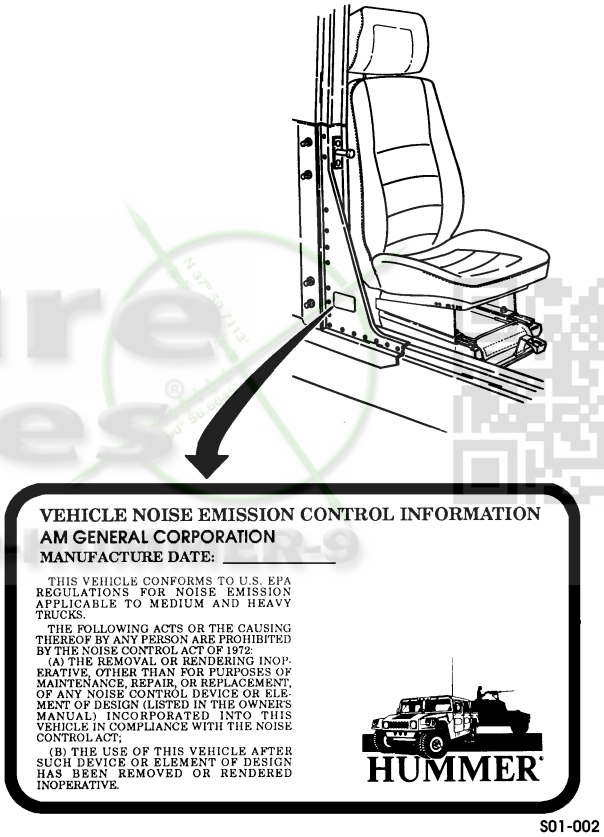

Figure 1-2: EPA Noise Emission Control Information Label

Adventure Accessories
HummerH1Parts.com 1-800

COMPONENT IDENTIFICATION

The automatic 4L80-E transmission serial number is located on the light blue plate on the right side of the transmission (Figure 1-3).

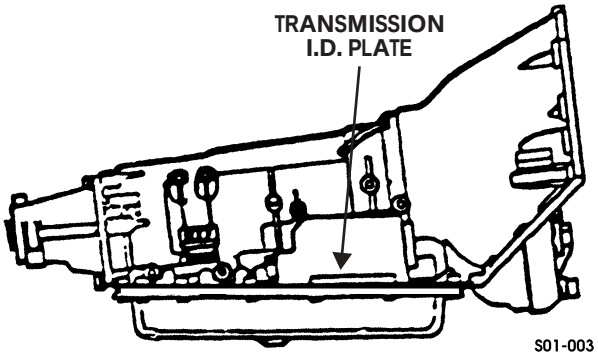

Figure 1-3: Transmission I.D. Plate

The New Venture Gear 242 transfer case serial number is located on the rear half case next to the rear extension (Figure 1-4).

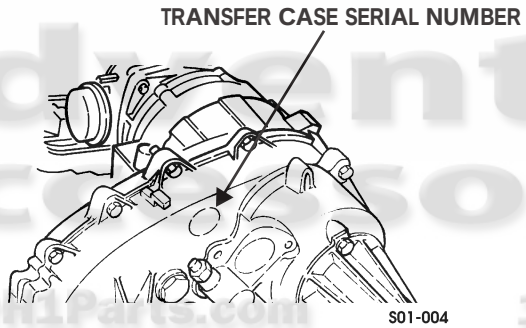

Figure 1-4: Transfer Case Serial Number

The 6.5 liter diesel engine serial number bar code decal is located at the rear of the left cylinder head (Figure 1-5).

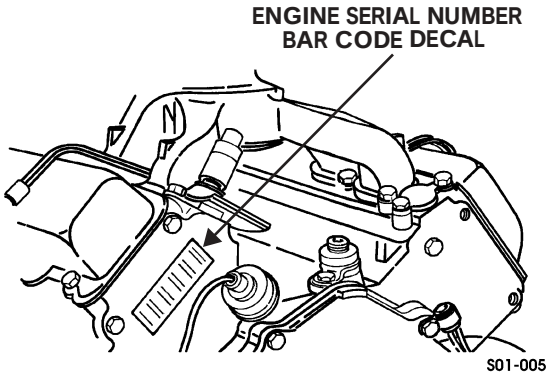

Figure 1-5: Engine Serial Number Bar Code Decal

VIN SYSTEM IDENTIFICATION

The VIN data plate is located on the left front corner of the dashpad (Figure 1-6).

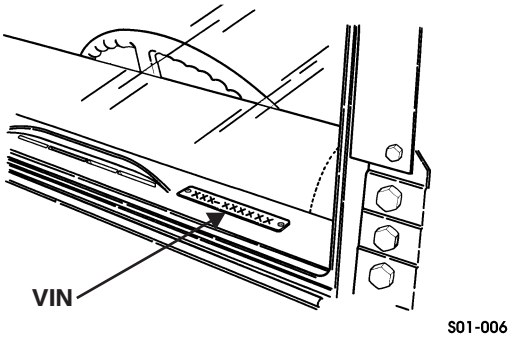

Figure 1-6: Vehicle Identification Number

The twelve digits of the VIN are explained in the chart on the following page (Figure 1-7).

Adventure Accessories
HummerH1Parts.com
1-800-HUMMER-9

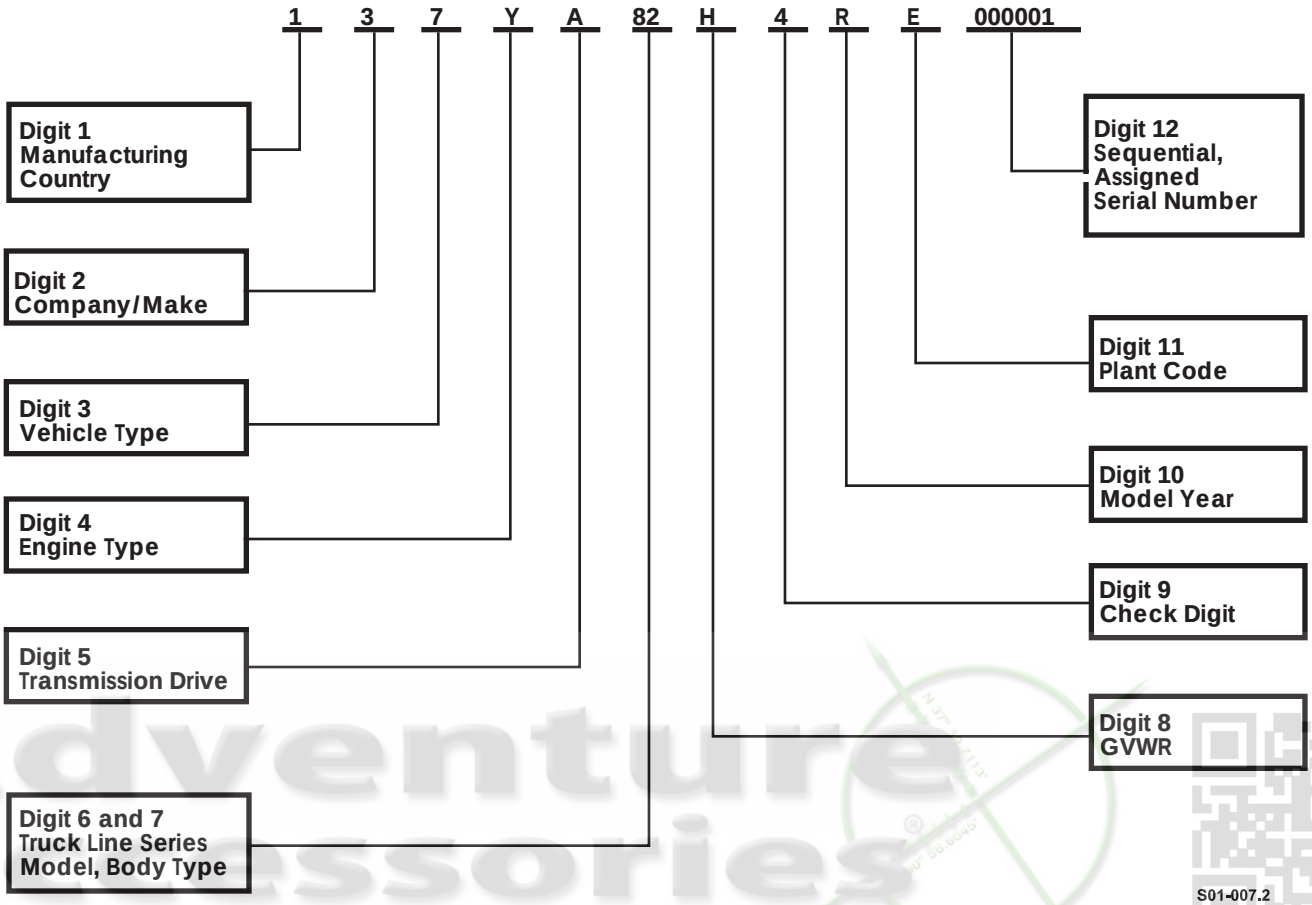

Figure 1-7: Vehicle Identification Number Chart

Adventure Accessories
HummerH1Parts.com 1-800-HUMMER-9

Vehicle Identification Number Code and Code Definition

Digit	Code	Code Definition
1	1	United States
2	3	AM General Corporation
3	7	Commercial Vehicles
4	D	5.7 L (350 in.^{3}), Unleaded Gas, GM, 8 cyl., 180 hp
	L	5.7L Leaded Gas, GCC
	X	6.2 L (378 in.^{3}), Diesel, GM, 8 cyl., 160 hp
	Y	6.5 L (395 in.^{3}), Diesel, GM, 8 cyl., 165 hp
	Z	TBD
5	E	3-Speed, Auto/LHD
	A	4-Speed, Auto/LHD

Digit	Code	Code Definition		
6 & 7	6	6	2-door	Truck, utility
	83	1-1/4 ton	4-door	Truck, utility

	84	1-1/4 ton	Station wagon	Truck, utility
	85	1-1/4 ton	Open body	Truck, utility
	86	1-1/4 ton	2-door fleet/industrial	Truck, utility
	87	1-1/4 ton	2-door Recruit	Truck, utility
	88	1-1/4 ton	Open body Recruit	Truck, utility
	89	1-1/4 ton	2-door enlarged cab	Truck, utility
	90	1-1/4 ton	Open body w/full hard doors	Truck, utility
8	Class B	3,001 lb - 4,000 lb (1,362 kg - 1,816 kg)		
	Class C	4,001 lb - 5,000 lb (1,817 kg - 2,270 kg)		
	Class D	5,001 lb - 6,000 lb (2,271 kg - 2,724 kg)		
	Class E	6,001 lb - 7,000 lb (2,275 kg - 3,178 kg)		
	Class F	7,001 lb - 8,000 lb (3,179 kg - 3,632 kg)		
	Class G	8,001 lb - 9,000 lb (3,633 kg - 4,086 kg)		
	Class H	9,001 lb - 10,000 lb (4,087 kg - 4,540 kg)		
	Class 3	10,001 lb - 14,000 lb (4,541 kg - 6,356 kg)		
	Class 4	14,001 lb - 16,000 lb (6,357 kg - 7,264 kg)		
	Class 5	16,001 lb - 19,500 lb (7,265 kg - 8,853 kg)		
9	—	Check Digit		
10	M	1991		
	N	1992		
	P	1993		
	R	1994		
	S	1995		
	T	1996		
	V	1997		
	W	1998		
	X	1999		
11	E	Mishawaka, Indiana		
	U	Livonia, Michigan		
12	—	Sequential Serial Number		

Adventure Accessories
HummerH1Parts.com 1-800-HUMMER-9

COMPONENT SPECIFICATIONS

Engine:

Manufacturer . . . . . GM Powertrain
Model . . . . . 6.5 L (395 in.^{3})
Type . Four Cycle, Diesel, Liquid-Cooled, Naturally Aspirated
. . . . . 165 hp (Net) @ 3,400 RPM
. . . . . 290 lb-ft (Net), 393 N•m @ 1,700 RPM Torque

Engine Dimensions:

Length . . . . . 35 in. (89 cm)
Width . . . . . 28 in. (71 cm)
Height . . . . . 28 in. (71 cm)
Net Weight, Dry . . . . . 701 lb (318 kg)

Governed Speed:

Full Load . . . . . 3,400 RPM
No Load . . . . . 3,750 RPM
Idle Speed . . . . . 200 RPM
Operating Speed . . . . . 1,500-2,300 RPM

Cylinders:

Number 8
Arrangement . . . . . 90° V
Firing Order . . . . . 1-8-7-2-6-5-4-3 (Clockwise)
Bore . . . . . 4.06 in. (103.12 mm)
Stroke (Nominal) . . . . . 3.82 in. (9.7 cm)
Displacement . . . . . 6.5 L (395 in.^{3})
Compression Ratio 21.5:1

Lubricating System:

Type . . . . . Pressure Feed
Operating Pressure (Normal) . 40-45 psi (276-310 kPa) @ 2000 RPM
Operating Pressure (Idle) . . . . . 10 psi (69 kPa)
System Capacity (Filter Included) . . . . . 8 qt (7.6 L)
Operating Temperature (Normal) . 180°-275° F (82°-135° C)
Oil Pump . . . . . Gear-Driven
Filter . . . . . Paper Element, Spin On

Fuel/Air System:

Fuel Lift Pump
Type . . . . . Electronic
Fuel Filter
Type . . . . . Two Stage Fuel Filter /Water Separator
Glow Plug
Type . . . . . Fast Start

Cooling System:

Type . . . . . Liquid w/Fan and Radiator
Operating Temperature (max).. 190°-235° F (88°-113° C)
Filler Cap Pressure . . . . . 15 psi (103 kPa)
Radiator
Type . . . . . 4 Core Downflow
Fan (Seven Blade)
Type . . . . . Suction w/Viscous Drive
Diameter . . . . . 19.5 in. (495 mm)
Thermostat
Starts to Open . . . . . 190° F (88° C)
Fully Open . . . . . 212° F (100° C)

Starter:

Manufacturer . . . . . Prestolite
Model . . . . . MMO
Capacity (Peak) . . . . . 6.0 hp
Voltage . . . . . 12 V

Alternator (Standard):

Manufacturer . . . . . Delco
Part No. 6003163
Output . . . . . 124 AMP @ 1842 RPM (engine)
Rated Voltage . . . . . 13.35 -15.9 V

Batteries:

Manufacturer . . . . . Delco or East Penn Group 78
Model 78-770
Type . . . . . Side Post, Maintenance-Free
Number 2
Voltage . . . . . 12 V
Amperage . . . . . 770 Cold Cranking AMPS Each Battery

Transmission:

Manufacturer . . . . . GM Powertrain
Model 4L80-E
Type . . . . . 4-Speed, Automatic
Converter Stall Torque Ratio 2.2:1
Gear Ratios
First 2.482:1
Second 1.482:1
Third 1.000:1
Fourth 0.75:1
Reverse 2.077:1
Oil Type . . . . . Dexron® III
Oil Pressure . . . . . 35-324 psi (241-2,234 kPa)

Transfer Case:

Manufacturer . . . . . New Venture Gear
Model 242
Type . . . . . Full Time Four-Wheel Drive
Gear Ratios
High and High Lock 1:1
Low Lock 2.72:1
Oil Type . . . . . Dexron® III

Axle/Differential:

Manufacturer . . . . . Dana
Type
Axle . . Mounted Differential W/ Independent Half Shafts
Differential . Hypoid Torque Biasing (Paired Worm Gears)
Gear Ratio 2.73:1

Adventure Accessories
Hummer111Parts.com 1-800-HUMMER-9

Geared Hub:

Manufacturer . . . . . AM General Corporation
Type. . . . . .Spur Gears
Gear Ratio 1.92:1

Service Brake Caliper (Front):

Manufacturer . . . . . Kelsey-Hayes
Piston Diameter . . . . . 2.6 in. (6.6 cm)

Service/Parking Brake Caliper (Rear):

Manufacturer . . . . . Kelsey-Hayes
Piston Diameter . . . . . 2.6 in. (6.6 cm)

Service Brake Rotor (Front):

Manufacturer . . . . . Kelsey-Hayes
Diameter . . . . . 10.5 in. (266.7 mm)
Thickness. . . . . 0.87 in. (22 mm)

Service/Parking Brake Rotor (Rear):

Manufacturer . . . . . Kelsey-Hayes
Diameter . . . . . 10.5 in. (266.7 mm)
Thickness. . . . . 0.87 in. (22 mm)

Steering System:

Steering Gear
Manufacturer . . . . . .Saginaw
Type. . . . . Recirculating Ball, Worm and Nut
Ratio 13/16:1
Power Steering Pump
Manufacturer . . . . . .Saginaw
Model 185
Output Pressure (Max) . . . . . 1,450 psi (9,998 kPa)
Flow Rate (Max) . . . . . 2.6 gpm (9.8 Lpm)
Capacity (@ 1500 RPM). . . . . 2.6 gpm (9.8 Lpm)

Frame:

Manufacturer . . . . . AM General Corporation
Type. . . . . .Steel Box
No. of Crossmembers 5

Winch:

Manufacturer . . . . . Warn
Model . . . . . 12000 12VDC HUMMER
Type. . . . . .Electric Drive, Thermal Cutoff Switch
Capacity. . . . . 12,000 lb (5,448 kg)

Air Conditioner (Optional):

Manufacturer (Compressor) . . . . . .Harrison
Model . . . . . .HD-6 HE
Field (Coil) . . . . . .12 V
Oil Capacity. . . . . 8 fl oz (237 ml)
Refrigerant. R-134a
Capacity:
. . . . . .W/O Auxiliary Air Conditioning 1 lb (.45 kg)
. . . . . .W/ Auxiliary Air Conditioning 1.2 lb (.54 kg)

Adventure Accessories
HummerKitParts.com 1-800-HUMMER-9

ABBREVIATIONS

a.c. . . . . Alternating Current
AMP . . . . . Ampere
CO . . . . . Carbon Monoxide
C . . . . . Celsius (centigrade)
cm . . . . . Centimeter
CDR . . . . . Crankcase Depression Regulator
cm^3 . . . . . Cubic Centimeter
$in.^3$ . . . . . Cubic Inch
cyl. . . . . Cylinder
° . . . . . Degree (angle or temperature)
dia . . . . . Diameter
d.c. . . . . Direct Current
F . . . . . Fahrenheit
ft . . . . . Feet
ft/min . . . . . Feet Per Minute
fl oz . . . . . Fluid Ounce
gal. . . . . Gallon
g . . . . . Gram
hp . . . . . Horsepower
in. . . . . Inch
INC. . . . . Include
I.D. . . . . Internal Diameter
km . . . . . Kilometer
km/h . . . . . Kilometers Per Hour
lh . . . . . Left Hand
L . . . . . Liter
max. . . . . Maximum
m . . . . . Meter
mpg . . . . . Miles Per Gallon
mph . . . . . Miles Per Hour
mm . . . . . Millimeter
min . . . . . Minimum
– . . . . . Minus
– . . . . . Negative
N•m . . . . . Newton-meters
No. . . . . Number
Ohm . . . . . Ohms
oz . . . . . Ounce
O.D. . . . . Outside Diameter
P/N . . . . . Part Number
% . . . . . Percentage
pt . . . . . Pint
+ . . . . . Plus
+ . . . . . Positive
lb . . . . . Pound
lb-ft . . . . . Pound-feet
lb-in. . . . . Pound-inch
psi . . . . . Pounds Per Square Inch
qt. . . . . Quart
: . . . . . Ratio
ref. . . . . Reference
RPM . . . . . Revolutions Per Minute
rh . . . . . Right-Hand
cm^2 . . . . . Square Centimeters
$in.^2$ . . . . . Square Inches
VIN . . . . . Vehicle Identification Number
V . . . . . Volts
W . . . . . Watts
UNC . . . . . Unified Coarse
UNF . . . . . Unified Fine

Adventure Accessories
Hummer1Parts.com 1-800-HUMMER-9

THE METRIC SYSTEM AND EQUIVALENTS

Metric Conversions

MULTIPLY	BY	TO GET
INCHES	2.54	CENTIMETERS
FEET	0.305	METERS
MILES	1.609	KILOMETERS
SQUARE INCHES	6.451	SQUARE CENTIMETERS
CUBIC INCHES	16.39	CUBIC CENTIMETERS
FLUID OUNCES	29.573	MILLIMETERS
PINTS	0.473	LITERS
QUARTS	0.946	LITERS
GALLON	3.785	LITERS
POUNDS	0.454	KILOGRAMS
SHORT TONS	0.907	METRIC TONS
POUND-INCHES	0.113	NEWTON-METERS
POUND-FEET	1.356	NEWTON-METERS
POUNDS PER SQUARE INCH	6.895	KILOPASCALS
MILES PER GALLON	0.425	KILOMETERS PER LITER
MILES PER HOUR	1.609	KILOMETERS PER HOUR

U.S. Standard Conversions

MULTIPLY	BY	TO GET
CENTIMETERS	0.394	INCHES
METERS	3.280	FEET
KILOMETERS	0.621	MILES
SQUARE CENTIMETERS	0.155	SQUARE INCHES
CUBIC CENTIMETERS	0.061	CUBIC INCHES
MILLILITERS	0.034	FLUID OUNCES
LITERS	2.113	PINTS
LITERS	1.057	QUARTS
LITERS	0.264	GALLONS
KILOGRAMS	2.205	POUNDS
METRIC TONS	1.102	SHORT TONS
NEWTON-METERS	0.738	POUND-FEET
NEWTON-METERS	8.851	POUND-INCHES
KILOPASCALS	0.145	POUNDS PER SQUARE INCH
KILOMETERS PER LITER	2.354	MILES PER GALLON
KILOMETERS PER HOUR	0.621	MILES PER HOUR

Adventure Accessories
HummerHTParts.com 1-800-HUMMER-9

Temperature

32° FAHRENHEIT = 0° CELSIUS212° FAHRENHEIT = 100° CELSIUS
5/9 (°F - 32) = °C . . . . . 9/5 °C + 32 = °F

TORQUE LIMITS

1. Special torque limits are indicated in the maintenance procedures for applicable components. The general torque limits shall be used when specific torque limits are not indicated in the maintenance procedure. These general torque limits cannot be applied to screws that retain rubber components. The rubber components will be damaged before the correct torque limit is reached. If a special torque limit is not given in the maintenance instruction, tighten the screw or nut until it touches the metal bracket, then tighten it one more turn.
2. Measure the diameter of the screw you are installing (Figure 1-8).

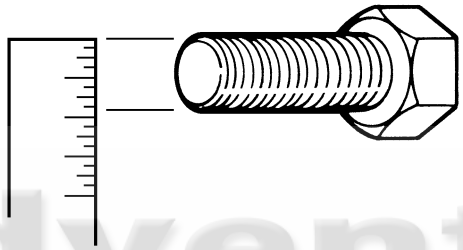

S01-008

Figure 1-8: Diameter of the Screw

3. Count the number of threads per inch (Figure 1-9).

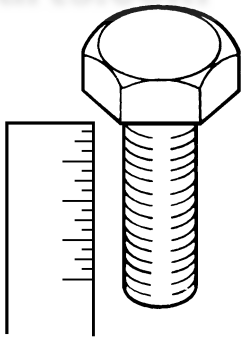

S01-009

Figure 1-9: Threads Per Inch

4. Under the heading SIZE, look down the left hand column until you find the diameter of the screw you are installing (there will usually be two lines beginning with the same size).
5. In the second column under size, find the number of threads per inch that matches the number of threads you counted in step 3.

Capscrew Head Markings

Manufacturer's marks may vary. These are all SAE Grade 5 (3-line) (Figure 1-10).

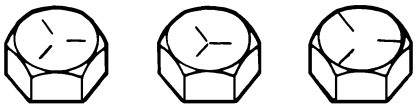

S01-010

Figure 1-10: SAE Grade 5 screws

6. To find the grade screw you are installing, match the markings on the head to the correct picture of CAP-SCREW HEAD MARKINGS on the torque table.
7. Look down the column under the picture you found in step 6 until you find the torque limit (in lb-ft or N•m) for the diameter and threads per inch of the screw you are installing.
8. Table 1-1 lists dry torque limits. Dry torque limits are used on screws that do not have lubricants applied to the threads. Table 1-2 lists wet torque limits. Wet torque limits are used on screws that have high pressure lubricants applied to the threads.

Adventure Accessories®
HummerH1Parts.com 1-800-HUMMER-9

Capscrew Head Markings

Table 1-1. Torque Limits for Dry Fasteners

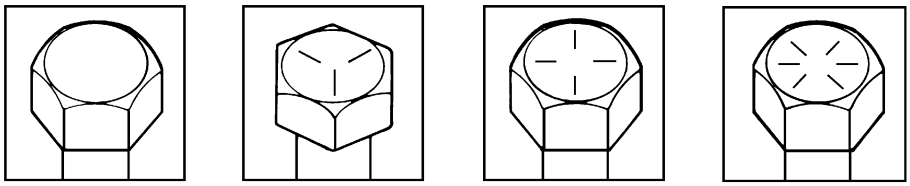

S01-011

TORQUE SIZE			SAE GRADE NO. 1 OR 2	SAE GRADE NO. 5	SAE GRADE NO. 6 OR 7	SAE GRADE NO. 8
DIA. INCHES	MILLI-METERS	THREADS PER INCH	POUND FEET (NEWTON-METERS)	POUND FEET (NEWTON-METERS)	POUND FEET (NEWTON-METERS)	POUND FEET (NEWTON-METERS)
1/4	6	20	5 (7)	8 (11)	10 (14)	12 (16)
1/4	6	28	6 (8)	10 (14)	— —	14 (19)
5/16	8	18	11 (15)	17 (23)	19 (26)	24 (33)
5/16	8	24	13 (18)	19 (26)	— —	27 (37)
3/8	10	16	18 (24)	31 (42)	34 (46)	44 (60)
3/8	10	24	20 (27)	35 (47)	— —	49 (66)
7/16	11	14	28 (38)	49 (66)	55 (75)	70 (95)
7/16	11	20	30 (41)	55 (75)	— —	78 (106)
1/2	13	13	39 (53)	75 (102)	85 (115)	105 (142)
1/2	13	20	41 (56)	85 (115)	— —	120 (163)
9/16	14	12	51 (69)	110 (149)	120 (163)	155 (210)
9/16	14	18	55 (75)	120 (163)	— —	170 (231)
5/8	16	11	63 (85)	150 (203)	167 (226)	210 (285)
5/8	16	18	95 (129)	170 (231)	— —	240 (325)
3/4	19	10	105 (142)	270 (366)	280 (380)	375 (509)
3/4	19	16	115 (156)	295 (400)	— —	420 (570)
7/8	22	9	160 (217)	395 (536)	440 (597)	605 (820)
7/8	22	14	175 (237)	435 (590)	— —	675 (915)
1	25	8	235 (319)	590 (800)	660 (895)	910 (1234)
1	25	14	250 (339)	660 (895)	— —	990 (1342)
1-1/8	29	—	— —	800 - 880 (1085 - 1193)	— —	1280 - 1440 (1736 - 1953)
1-1/4	32	—	— —	—	— —	1820 - 2000 (2468 - 2712)
1-3/8	35	—	— —	1460 - 1680 (1980 - 2278)	— —	2380 - 2720 (3227 - 3688)
1-1/2	38	—	— —	1940 - 2200 (2631 - 2983)	— —	3160 - 3560 (4285 - 4827)

Adventure Accessories
HummerH1Parts.com 1-800-HUMMER-9

Capscrew Head Markings

Table 1-2. Torque Limits for Wet Fasteners

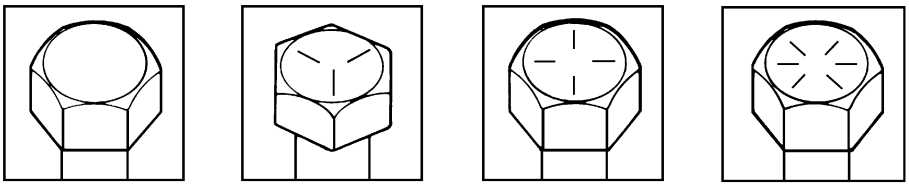

S01-011

TORQUE SIZE			SAE GRADE NO. 1 OR 2	SAE GRADE NO. 5	SAE GRADE NO. 6 OR 7	SAE GRADE NO. 8
DIA. INCHES	MILLI-METERS	THREADS PER INCH	POUND FEET (NEWTON-METERS)	POUND FEET (NEWTON-METERS)	POUND FEET (NEWTON-METERS)	POUND FEET (NEWTON-METERS)
1/4	6	20	4 (5)	7 (10)	9 (12)	11 (15)
1/4	6	28	5 (7)	9 (12)	— —	13 (17)
5/16	8	18	10 (14)	15 (20)	17 (23)	22 (30)
5/16	8	24	12 (16)	17 (23)	— —	24 (33)
3/8	10	16	16 (22)	28 (38)	31 (42)	40 (54)
3/8	10	24	18 (24)	32 (43)	— —	44 (60)
7/16	11	14	25 (34)	44 (60)	50 (68)	63 (85)
7/16	11	20	27 (37)	50 (68)	— —	70 (95)
1/2	13	13	35 (48)	68 (92)	77 (104)	95 (129)
1/2	13	20	37 (50)	77 (104)	— —	108 (146)
9/16	14	12	46 (62)	99 (134)	108 (146)	140 (190)
9/16	14	18	50 (67)	108 (146)	— —	153 (207)
5/8	16	11	57 (77)	135 (183)	150 (203)	189 (256)
5/8	16	18	85 (115)	153 (207)	— —	216 (293)
3/4	19	10	95 (129)	243 (330)	252 (342)	338 (458)
3/4	19	16	104 (141)	266 (361)	— —	378 (513)
7/8	22	9	144 (195)	356 (483)	396 (537)	545 (739)
7/8	22	14	158 (214)	392 (532)	— —	608 (824)
1	25	8	212 (287)	531 (720)	594 (805)	819 (1111)
1	25	14	225 (305)	594 (805)	— —	891 (1208)
1-1/8	29	—	— —	720 - 792 (976 - 1074)	— —	1152 - 1296 (1562 - 1757)
1-1/4	32	—	— —	— —	— —	1638 - 1800 (2221 - 2441)
1-3/8	35	—	— —	1314 - 1512 (1782 - 2050)	— —	— —
1-1/2	39	—	— —	1746 - 1980 (2368 - 2685)	— —	2844 - 3204 (3857 - 4345)

Adventure Accessories
HummerH1Parts.com 1-800-HUMMER-9

SPECIAL TOOLS

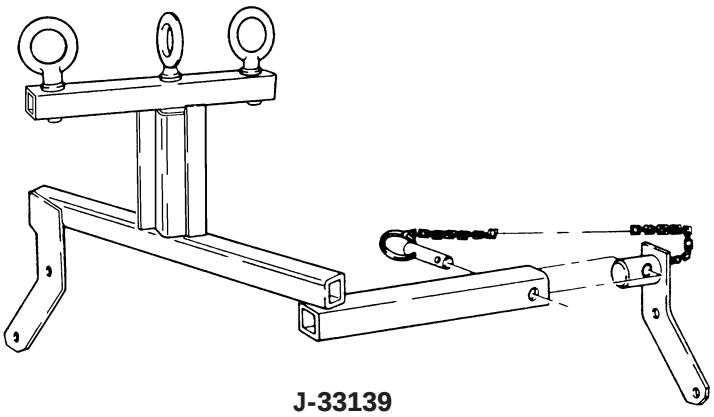

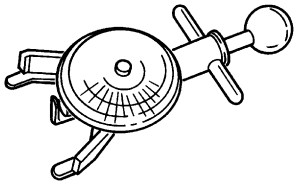

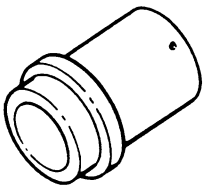

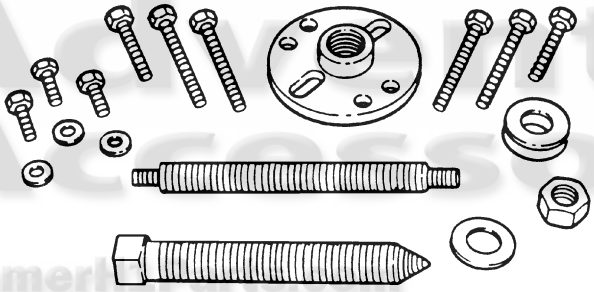

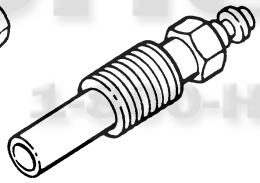

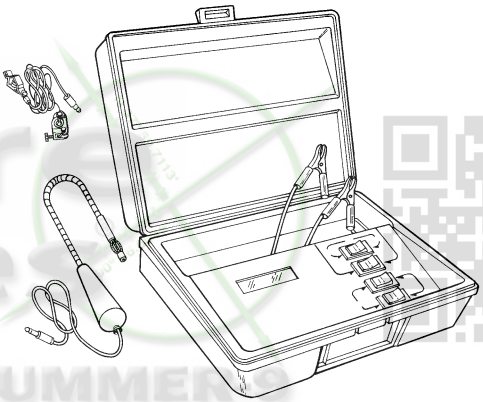

S01-013.1

Adventure Accessories
HummerHarness.com
1-800-HUMMER9

SPECIAL TOOLS, ENGINE AND DRIVEBELTS

TOOL	DESCRIPTION
J-23523-F	Harmonic Balancer Remover and Installer
J-33300-AMG	Timing Tach. Meter, Lumy/Mag II
J-33139	Sling, Engine Lifter
J-22102	Front Seal Installer
BT-3373-F	Belt Tension Gauge
J-26999-30	Compression Gauge Adapter

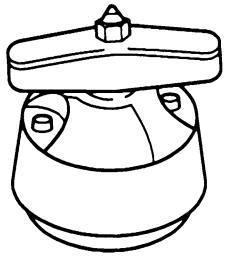

J-39084

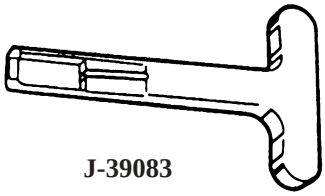

J-39083

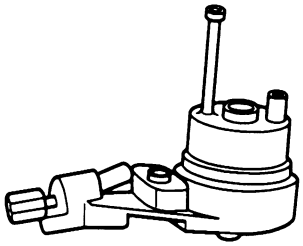

J-33042

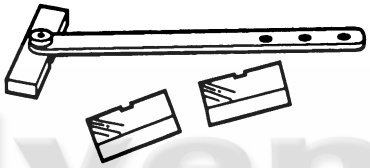

J-33043-2

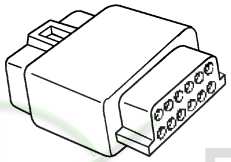

J-43160

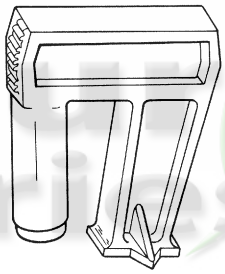

5735122

S01-021.2

Adventure Accessories
HummerH1Parts.com
1-800-HUMMER-9

SPECIAL TOOLS, ENGINE AND DRIVEBELTS (CONT'D)

TOOL	DESCRIPTION
J-39084	Rear Main Seal Installer (6.5 L Only)
J-39083	Glow Plug Connector (Remover/Installer)
J-33042	Static Timing Gauge
J-43160	Tech 1 Data Link Connector Adapter
J-33043-2	Gauge Block, Throttle Position Sensor
5735122	Diesel Timing Gauge

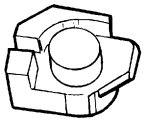

J-38655

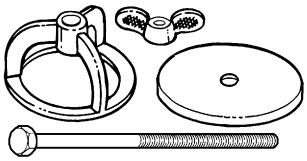

J-23327

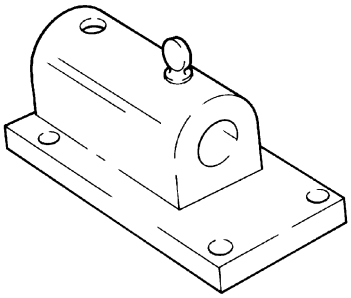

J-03289-20

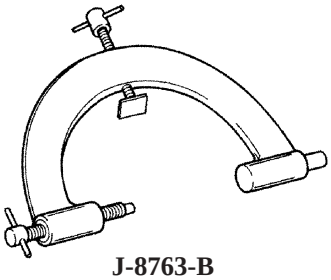

J-8763-B

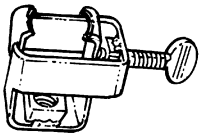

J-38868-A

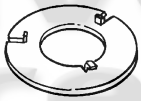

J-25018-A

J-23093

S01-012.2

Adventure Accessories
HummerH1Parts.com
1-800-HUMMER-9

SPECIAL TOOLS, TRANSMISSION

TOOL	DESCRIPTION
J-38655	Adapter, Transmission Holding Fixture
J-23327	Clutch Spring Compressor
J-03289-20	Transmission Holding Fixture Base
J-8763-B	Holding Fixture
J-38868-A	Installer/Remover, Gear Unit Assembly
J-25018-A	Clutch Spring Compressor Adapter
J-23093	Center Support Tool

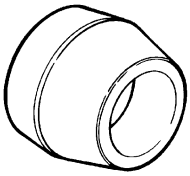
J-38729

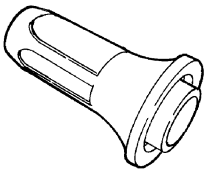
J-41505

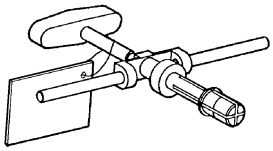
J-39195

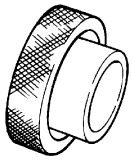
J-38695

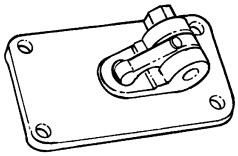
J-38737

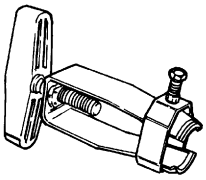
J-37789-A

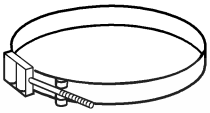
J-21368-A

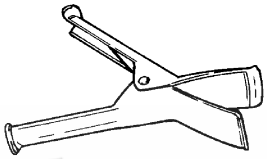
J-38358

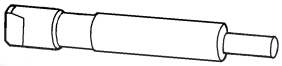
J-21370-10

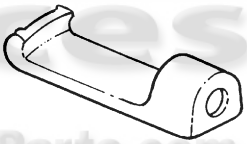
J-23129

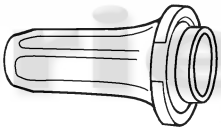
J-38694

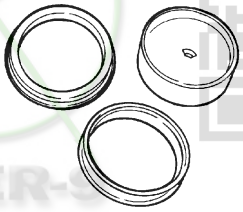
J-38731

S01-058.2

Adventure Accessories®
HummerH1Parts.com
1-800-HUMMER-9

SPECIAL TOOLS, TRANSMISSION (CONT'D)

TOOL	DESCRIPTION
J-38729	Seal Protector, Overrun Clutch Piston
J-41505	Seal Installer, Rear Lube
J-39195	Tool, Converter End-Play
J-38695	Snapring Placer, Direct Clutch Spiral
J-38737	Band, Apply Pin Checking Tool
J-37789-A	Pump Remover
J-21368-A	Alignment Band, Pump Body and Cover
J-38358	Remover/Installer, Forward Clutch Assembly
J-21370-10	Band (To Apply Pin Gauge)
J-23129	Remover, Seal
J-38694	Seal Installer, Oil Pump and Rear Extension Housing
J-38371	Protector/Spacer, Fourth Clutch Piston and Housing Seal

Adventure Accessories
HummerH1Parts.com
1-800-HUMMER-9

SPECIAL TOOLS, TRANSMISSION (CONT'D)

TOOL	DESCRIPTION
J-21363	Center Seal Protector
5740777	Outer Seal Protector
J-21364-A	Gear Unit Fixture Adapter
J-06116-A	Rear Gear Holding Fixture
J-21362	Inner Seal Protector
J-24396	Intermediate Clutch Alignment Tool
J-6125-B	Slide Hammer, Set of 2
J-8092	Drive Handle

J-38734

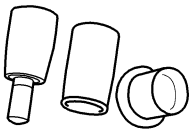
J-38739

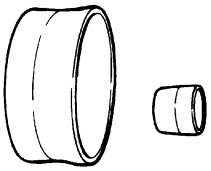
J-38732

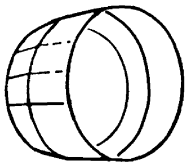
J-21409

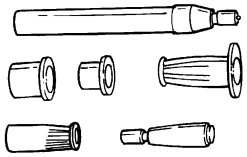
J-38736

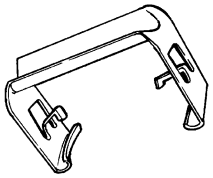
J-38733-A

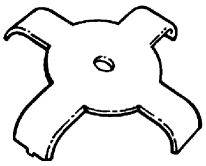
J-38882

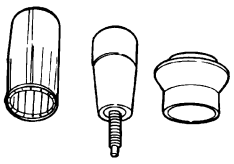
J-38735

J-28585

Adventure Accessories
HummerH1Parts.com 1-800-HUMMER-9

S01-060

SPECIAL TOOLS, TRANSMISSION (CONT'D)

TOOL	DESCRIPTION
J-38734	Adapter, Intermediate Clutch Piston Compressor
J-38739	Installer/Sizer/Pusher, Oil Pump Assembly Seal Ring
J-38732	Protector, Direct and Forward Clutch Piston and Seal, Outer
J-21409	Protector, Direct and Forward Clutch Piston and Seal, Inner
J-38736	Installer/Sizer/Pusher, Center Support Seal
J-38733	Adapter, Fourth Clutch Spring and Retainer Assembly
J-38882	Remove/Installer, Direct Clutch Assembly
J-38735	Installer/Sizer/Pusher, Turbine Shaft Seal
J-28585	Remover, Snapring

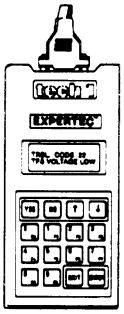

TK-O-AE

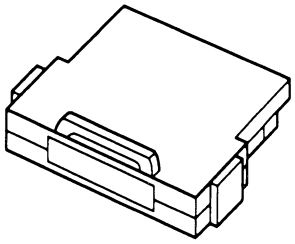

J-42645-B

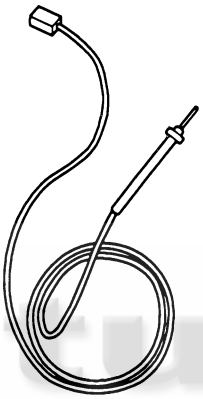

TM-1152

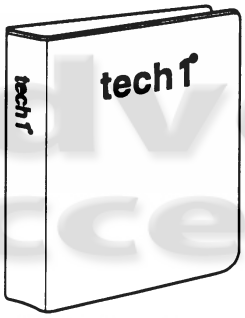

TM-1189-A

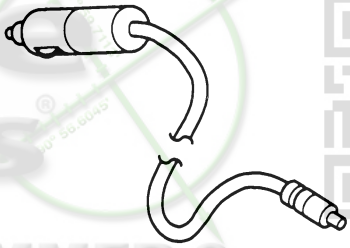

3000053E

S01-023

Adventure Accessories
HummerH1Parts.com
1-800-HUMMER-9

SPECIAL TOOLS, TRANSMISSION (CONT'D)

TOOL	DESCRIPTION
TK-O-AE	Tech 1 (Diagnostic Scanner)
J-42645-B	Powertrain Cartridge
TM-1189-A	Operator's Manual (Tech 1)
TM-1152	Test Lead
300053E	DC Power Cable

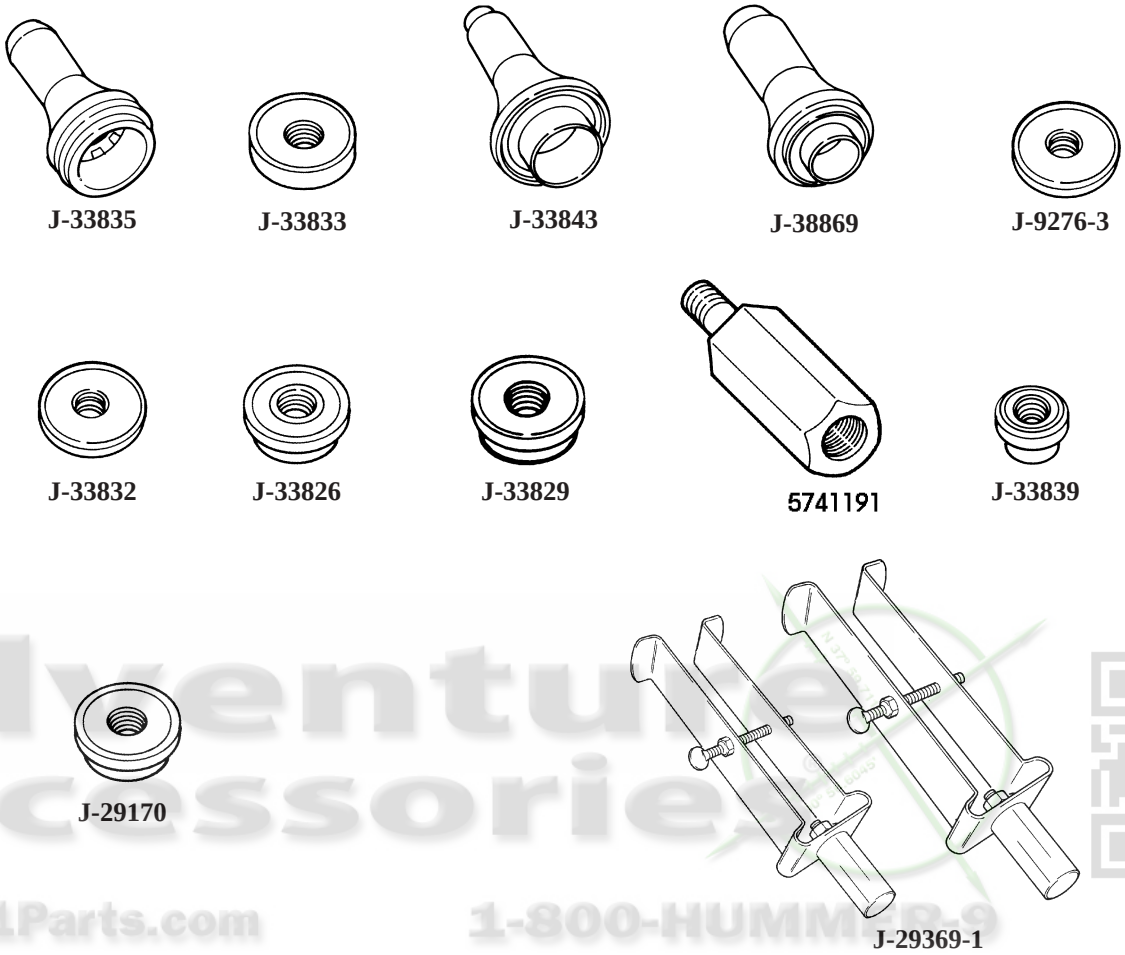

Adventure Accessories
HummerH1Parts.com
1-800-HUMMER-9

SPECIAL TOOLS, TRANSFER CASE

TOOL	DESCRIPTION
J-33835	Pump Housing Seal Installer
J-33833	Output Shaft Front Bearing Installer
J-33843	Input Gear Seal Installer
J-33869	Output Shaft Seal Installer
J-9276-3	Bearing Cup Tool
J-33832	Output Shaft Rear Bearing Installer
J-33826	Bushing Remover/Bearing Installer
J-33829	Mainshaft Pilot Bearing Installer
5741191	Slide Hammer Adapter
J-33839	Extension Housing Bushing Remover
J-29170	Bearing Tool
J-29369-1	Bearing Remover Set

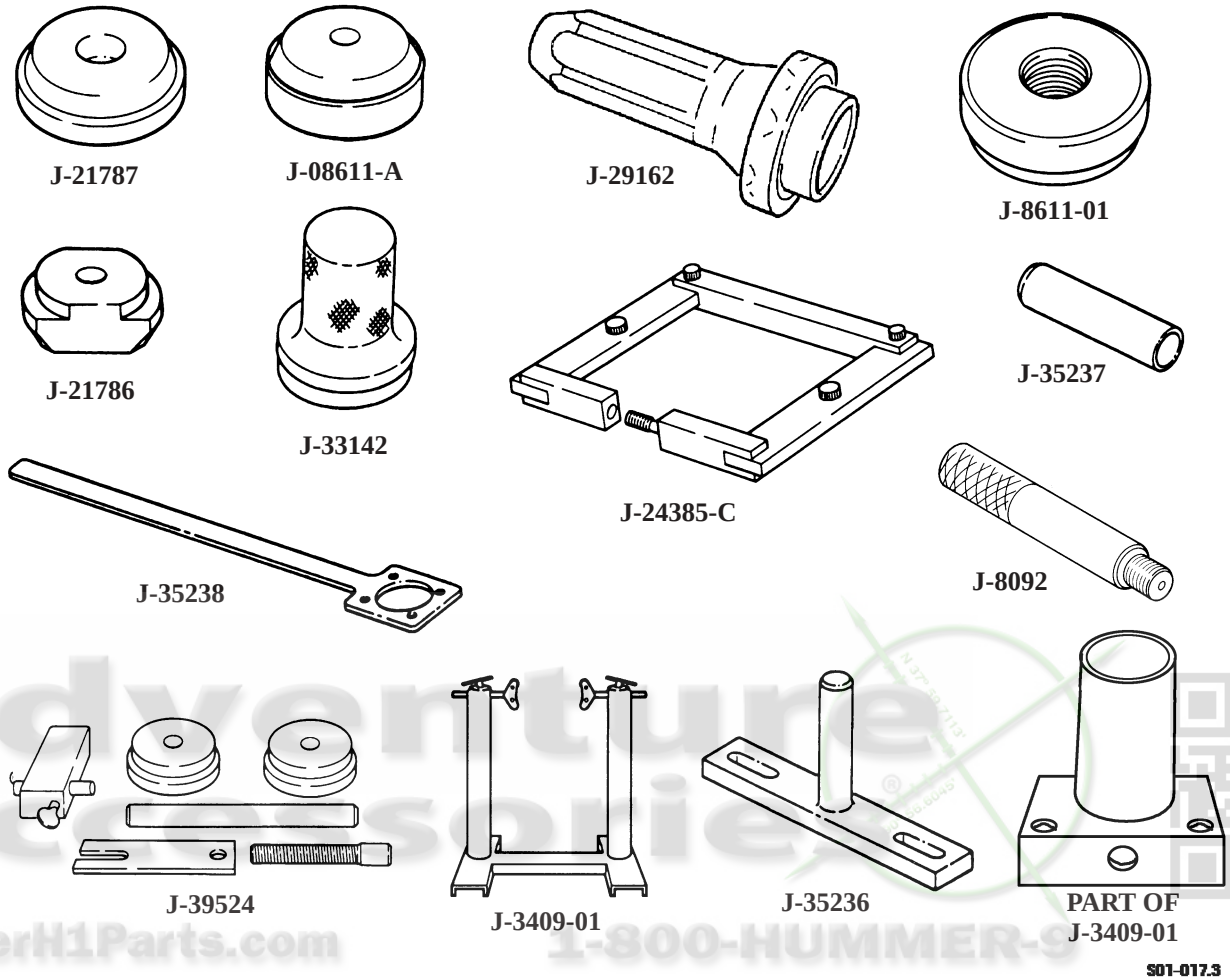

Adventure Accessories
HummerH1Parts.com
1-800-HUMMER-9

SPECIAL TOOLS, DIFFERENTIAL

TOOL	DESCRIPTION
J-21787	Front Pinion Bearing Cup Remover
J-08611-A	Front Pinion Bearing Cup Installer
J-29162	Yoke Seal Installer
J-8611-01	Rear Pinion Bearing Cup Installer
J-21786	Rear Pinion Bearing Cup Remover
J-33142	Axle Shaft And Seal Installer
J-24385-C	Rear Axle Housing Spreader
J-35237	Bearing Installer
J-35238	Pinion Holding Tool
J-8092	Driver Handle
J-39524	Pinion Gauge Set
J-3409-01	Stand, with Holding Fixtures
J-35236	Flange Holding Tool
c/w J-3409-01	Axle Holding Fixture Adapter (part of J-3409-01)

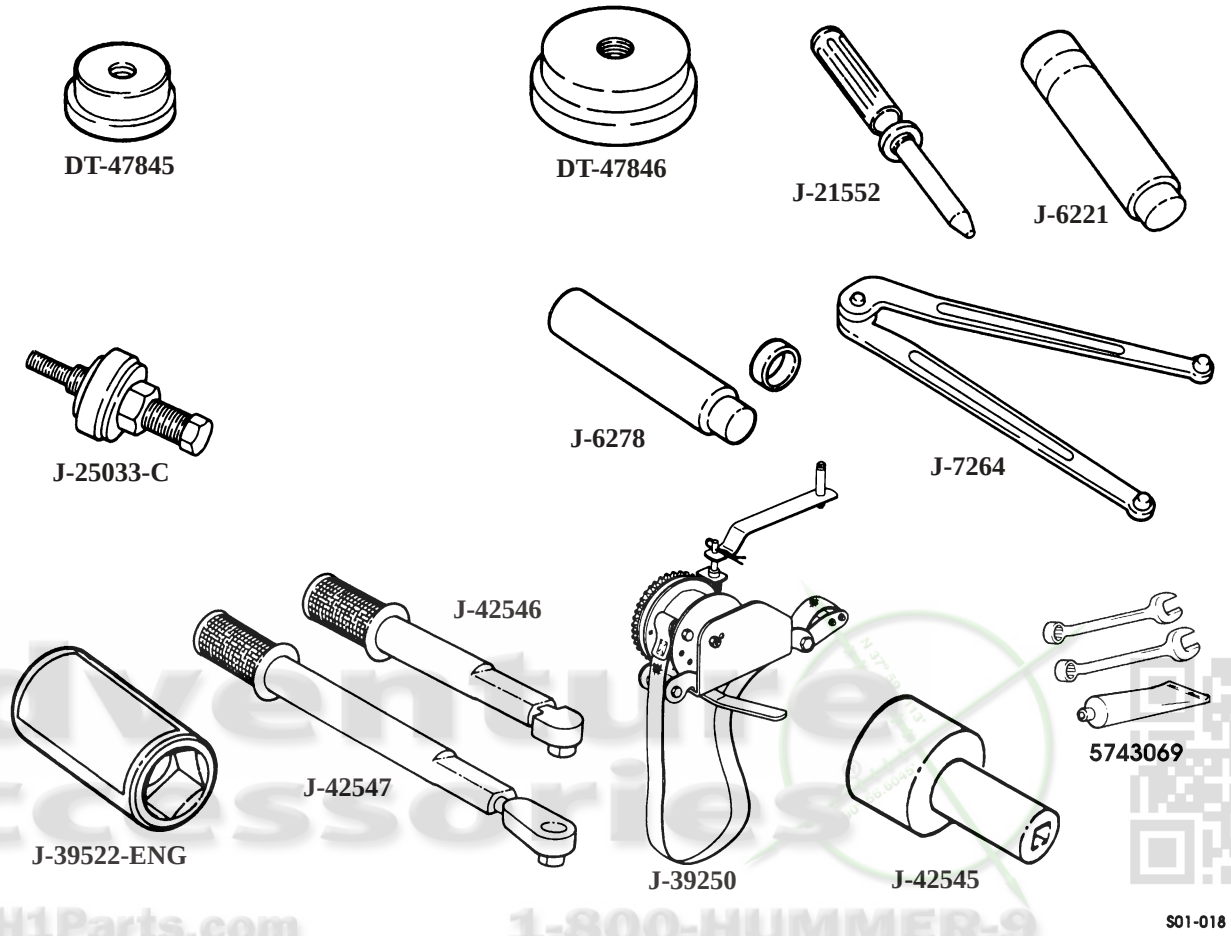

Adventure Accessories
HummerH1Parts.com
1-800-HUMMER-9

SPECIAL TOOLS, GEARED HUB, WHEEL/TIRE ASSEMBLY, AND STEERING

TOOL	DESCRIPTION
DT-47845	Input Seal Installer
DT-47846	Spindle Seal Installer
J-21552	Rack Piston Arbor
J-6221	Stub Shaft Bearing Tool
J-25033-C	Power Steering Pump Pulley Installer
J-6278	Pitman Shaft Bearing Installer/Remover
J-7264	Spanner Wrench
J-39522-ENG	Wheel Assembly Socket, 5 Sided
J-42547	Torque Wrench, 1/2 in. Drive, Preset
J-42546	Torque Wrench, 1/4 in. Drive, Preset
J-39520	Runflat Tool
J-42545	Clampnut Socket
5743069	Kit, CTIS Tools

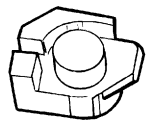

5743128

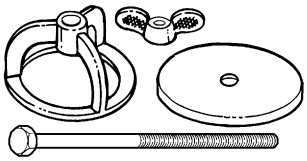

5743116

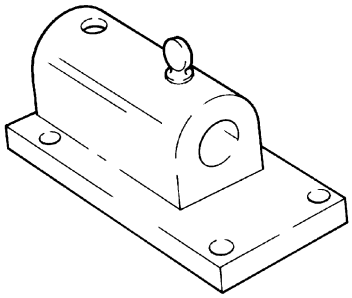

5740070

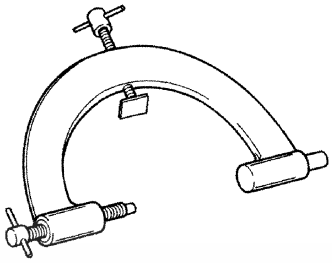

5740069

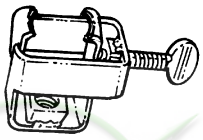

5743117

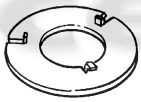

5743115

5743126

S01-012.2

Adventure Accessories®
HummerH1Parts.com
1-800-HUMMER-9

SPECIAL TOOLS, FUEL INJECTION PUMP, AND INJECTOR

TOOL	DESCRIPTION
5743110	Injection Pump Service Kit
5743111	Face Cam Setting Tool
5743112	Pump Adjusting Tool
5740748	Nozzle, Socket 30 mm
5740757	Pressure Gauge
5735209	Pressure Gauge, Adapter Injection Pump
5743142	Housing Pressure Adapter

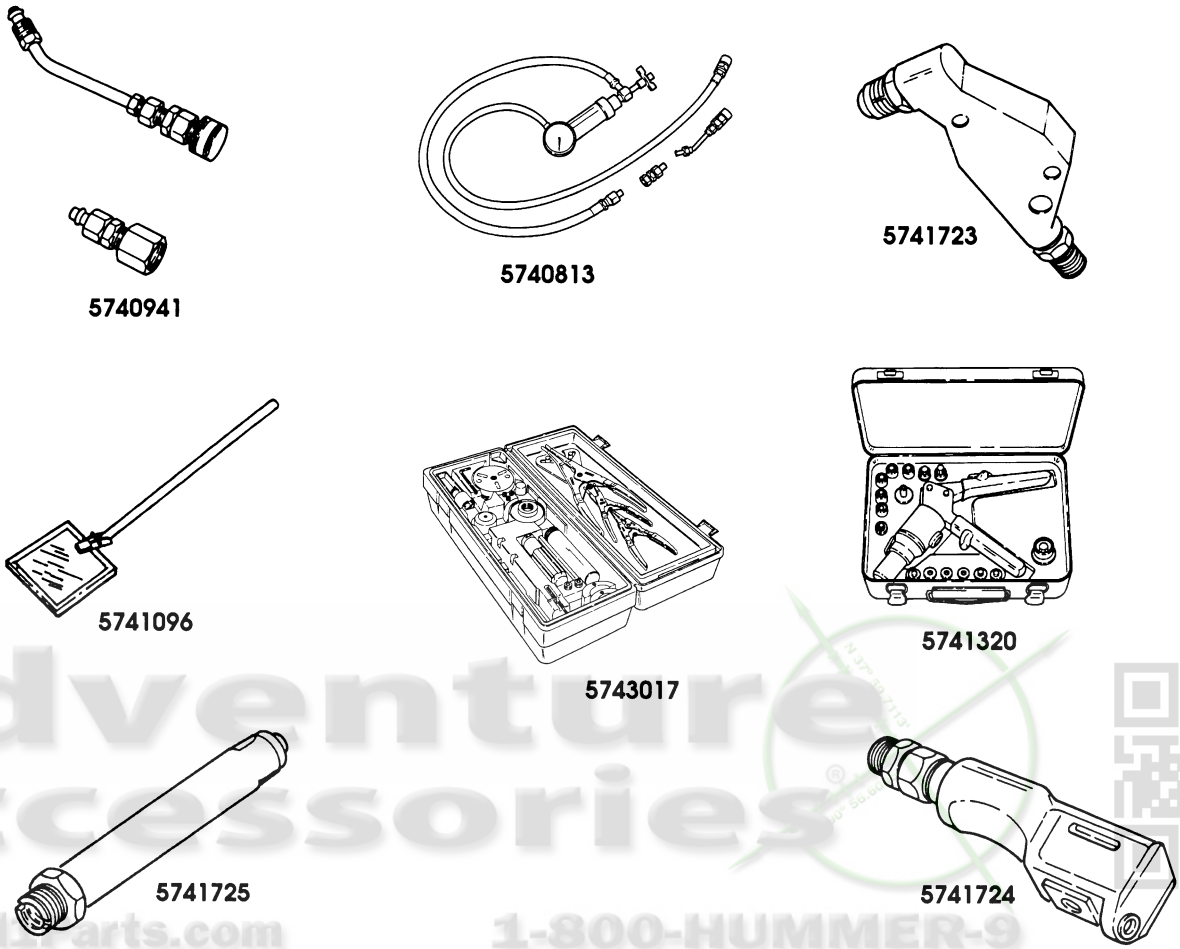

S01-19.2

Adventure Accessories
HummerHPparts.com
1-800-HUMMER-9

SPECIAL TOOLS, STEERING PUMP, BODY AND SPEEDOMETER DRIVE

TOOL	DESCRIPTION
5740941	Power Adapter
5740813	Analyzer Tool Kit
5741723	Right-Angle Head Puller
5741096	Inspection Mirror
5741725	Straight Head Puller
5741320	Riveter Tool Kit
5743017	Air Conditioner Compressor Tool Kit
5741724	Offset Head Puller

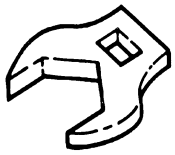

5741199
5741198
5741197
5741196
5740989
5741195

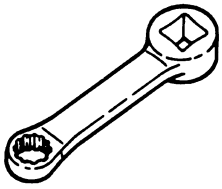

5741070
5741071

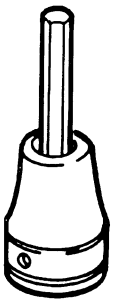

5741812
5742742

11655788-2

5732210

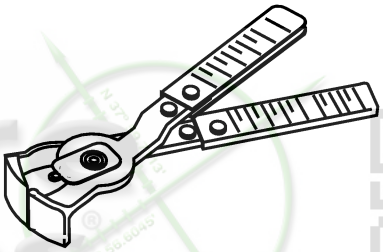

5743141

S01-020

Adventure Accessories
HummerH1Parts.com
1-800-HUMMER-9

SPECIAL TOOLS, MULTIPURPOSE

TOOL	DESCRIPTION
5741199	Crowfoot 9/16 in., 3/8 in. Drive
5741198	Crowfoot 11/16 in., 3/8 in. Drive
5741197	Crowfoot 5/8 in., 3/8 in. Drive
5741196	Crowfoot 7/8 in., 3/8 in. Drive
5740989	Crowfoot 1/2 in., 3/8 in. Drive
5741195	Crowfoot 5/16 in., 3/8 in. Drive
5741070	Adapter, Torque Wrench, 9/16 in.
5741071	Adapter, Torque Wrench, 3/4 in.
5741812	Hexagon Head Driver, 3/16 in., 3/8 in. Drive
5742742	Hexagon Head Driver, 7 mm, 3/8 in. Drive
11655788-2	Socket Adapter, 3/8 in. Drive to 1/2 in. Drive
5732210	Torx Socket
5743141	Boot Clamp Pliers

GENERAL REMINDERS

Cover seats and carpet before working inside vehicle.
Using water, immediately clean spilled hydraulic fluid or battery acid from paint.
Never rely on the jack to support the weight of the vehicle. Place jack stands under the vehicle in appropriate locations.
Always have a fire extinguisher nearby when working on fuel/electrical systems.
Plug or cap all fuel, oil, and hydraulic lines immediately after disconnection to prevent fluid loss or contamination.
Disconnect the battery ground cable before working on fuel or electrical components.

Cleaning

Use care in all cleaning operations. Dirt and foreign material are a constant threat to satisfactory vehicle operation.

1. Keep your hands clean and free from grease which can accumulate dirt, dust, and grit.

WARNING: Improper cleaning methods and use of unauthorized cleaning solutions will cause personal injury and damage to equipment.

2. Clean all parts before inspection, after repair, and before assembly.
3. After cleaning, all parts must be covered or wrapped to protect them from dust and/or dirt.
4. All parts subject to rust must be lightly oiled and covered.
5. Keep all related parts and components together. Do not mix parts.

WARNING: Compressed air used for cleaning shall not exceed 30 psi (207 kPa). Use only with effective chip guarding and personal protective equipment (goggles, shield, gloves, etc.).

Particular attention must be given to all oil passages in castings and machined parts. Oil passages must be clean and free of any obstructions. Clean passages with wire probes, then flush with solvent. Dry with compressed air.

***CAUTION**: Do not allow solvents to come in contact with seals, cables, or flexible hoses. These cleaners cause leather, rubber, and synthetic materials to dry out, rot, and lose pliability, making them unserviceable. Clean hoses and other nonmetallic parts with soap and water.*

Bearings require special cleaning after removing surface oil and gum deposits. Place bearings in hot oil 140° F (60° C) to loosen congealed oil and grease. Wipe bearings dry with a clean, lint-free cloth. Do not use compressed air.
Clean electrical components with a clean cloth, dampened with cleaning solvent. Be careful not to damage protective insulation. Use compressed air to dry electrical components.

Inspection

Exercise extreme care in all phases of inspection. Dimensional standards for parts have been fixed at very close tolerances, so be sure to use specification tables. Use specified inspection equipment for inspection where cracks and other damage cannot be spotted visually.
Inspect all ferrous and nonferrous castings for cracks using appropriate method. Particularly check areas around studs, pipe plugs, threaded inserts, and sharp corners. Replace if damaged.
Inspect machined surfaces for nicks, burrs, and raised metal. Mark damaged areas for repair or replacement.
Check all gasket mating surfaces, flanges on housings, and supports for warpage with a straight-edge or surface plate. Inspect mating surfaces for discolorations, which may indicate leakage.
Check all bushings and bearings for secure fit, evidence of heating, wear, burrs, nicks, and out-of-round condition.
When inspecting gears, look for the following:

1. Missing, cracked, worn, burred, or pitted gear teeth.
2. Worn, burred, or pitted splines.
3. Worn or damaged keyway slots.

Repair

Repair of most parts and components is limited to general procedures outlined in this service manual and the following detailed instructions:

1. Replace all cracked castings.
2. Repair damaged threaded pipe plug and/or capscrew holes with a thread tap. Repair oversize holes with threaded inserts.

NOTE: Replacement studs have a special coating and must have a small amount of antiseize compound applied before installation.

3. Replace all bent or stretched studs. Repair minor damage with a thread-restorer file.
4. Repair of drive gears should be limited to removal of minor nicks, burrs, or scratches on gear teeth. If keyways are worn or enlarged, replace gear.
5. Remove oil seals, being careful not to damage casting or adapter bore. Always install new seal using proper seal replacing tool.

Assembly

Cleanliness is essential in all component assembly operations. Dirt and dust, even in small amounts, are abrasive. Parts must be cleaned as specified and covered during storage. Coat all bearing and contact surfaces with the assembly working lubricant to ensure lubrication of parts during initial operation.
Ensure new torque nuts and items such as lockwashers, cotter pins, and woodruff keys are used where required in all assembly procedures.

Adventure Accessories
Hummer1Parts.com 1-800-HUMMER-3

LUBRICATION LOCATIONS AND SCHEDULES

NOTE: All lubrication intervals are based on normal operations.

Service intervals may be shortened if lubricants are contaminated, or if the equipment is operated under adverse conditions. Refer to Table Fluid/Lubricant Capacities and Recommended Temperatures on page 1–33 for fluid/lubricant capacities and recommended temperatures.

For Operation of Equipment in Protracted Cold Temperatures Below -15° F (-26° C)

Remove lubricants prescribed in table 1-3 for temperatures above -15° F (-26° C). Relubricate with lubricants specified in key for temperatures below -15° F (-26° C). Use the correct lubricant as required to meet the temperature ranges prescribed in the key.

Crankcase

NOTE: If oil level is above "FULL," it may be due to oil cooler drain-back. Operate the engine for one minute, shut it down, wait one minute, and recheck oil level (Figure 1-11).

Adventure Accessories
Hummer 1-800-HUMMER

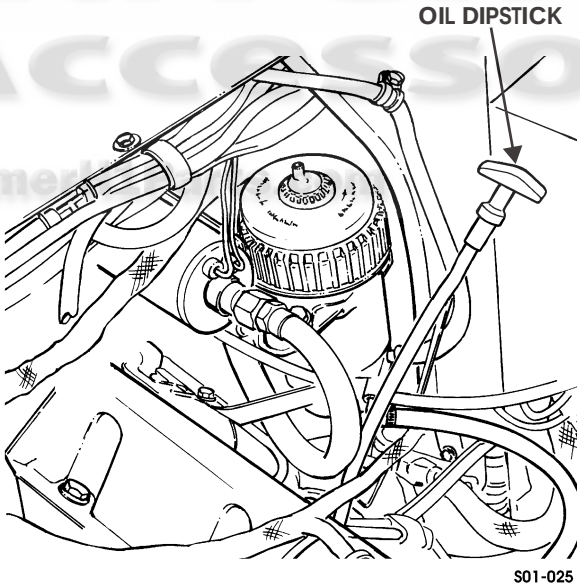

Figure 1-11: Engine Oil Dipstick

Replace oil filter each time crankcase is drained (Figure 1-12). Fill crankcase with 8 qt (7.6 L) of engine oil. Crankcase capacity is 7 qt (6.6 L) and oil filter capacity is 1 qt (0.95 L).
Oil is added to crankcase through the fill tube which is located on top of engine (Figure 1-13).

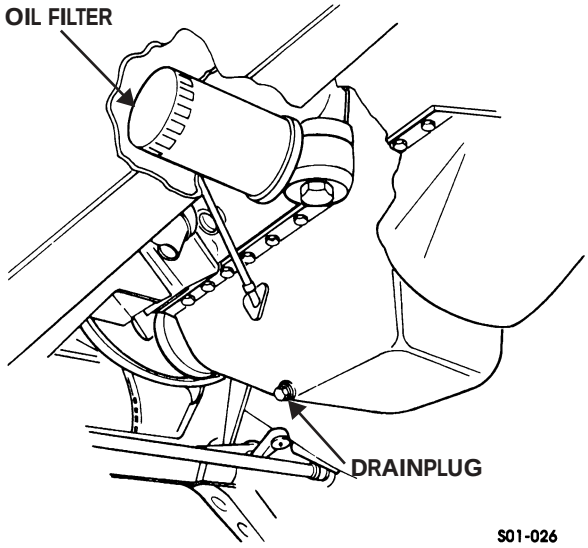

Figure 1-12: Engine Oil Filter

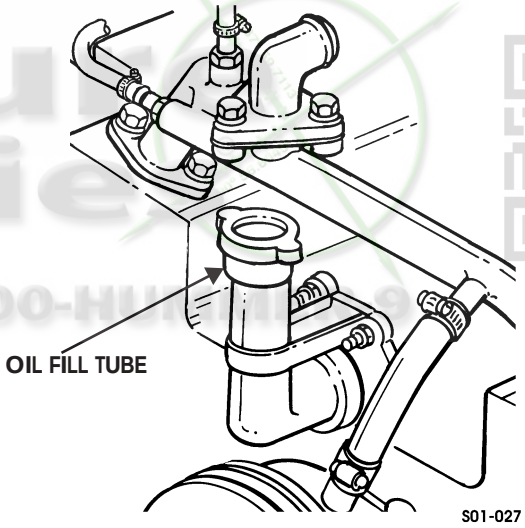

Figure 1-13: Engine Oil Fill Tube

Check crankcase oil level at each fuel fill. Start engine and visually check for oil leaks at drainplug and oil filter. Stop engine and allow approximately one minute for oil to drain back into oil pan, then recheck oil level with dipstick. Change oil every 3,000 mi (4 800 km), or semiannually, whichever occurs first.

Engine Oil Filter

Change oil filter every 3,000 mi (4 800 km), or semiannually, whichever occurs first.

Fuel Filter

Replace filter element every 6,000 mi (9 600 km), or annually, whichever occurs first (Figure 1-14).

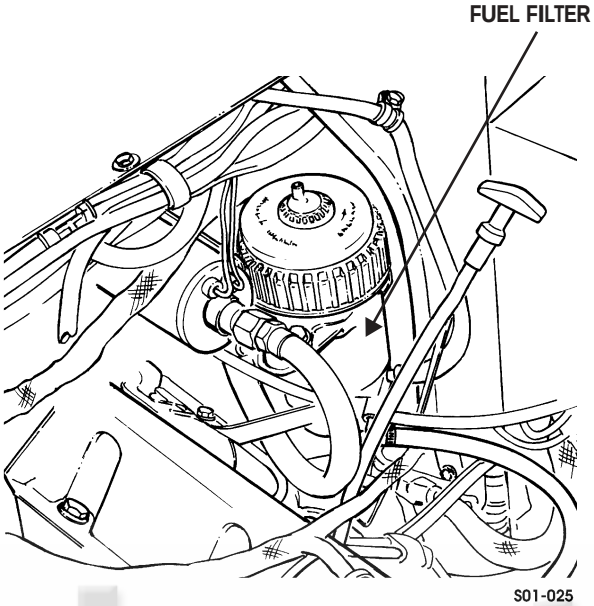

Figure 1-14: Fuel Filter

Transmission

***CAUTION**: Do not overfill transmission. The fluid level rises as the fluid temperature increases; therefore, do not check level before the transmission has reached normal operating temperature. The safe operating level is within the crosshatch marks on the dipstick. Overfilling will result in damage to the transmission. Use Dexron® III for filling transmission. Failure to do so will cause damage to the transmission.*

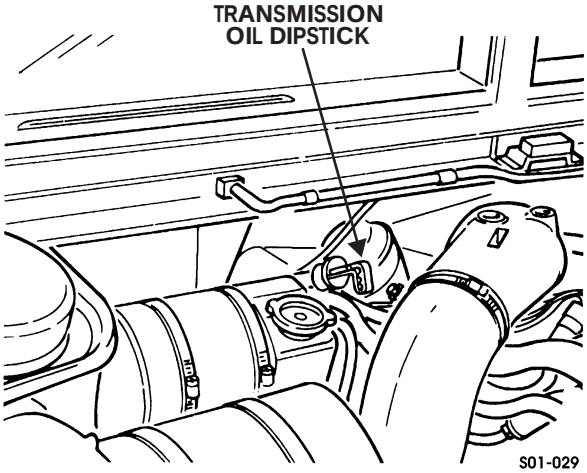

Figure 1-15: Transmission Dipstick

NOTE: Replace transmission oil filter each time transmission is drained. Fill transmission with 7.7 qt (7.3 L) of Dexron® III.

Weekly, check and fill transmission to proper level. Operate transmission through all operating ranges to fill cavities and fluid passages. With vehicle positioned on level ground, allow engine to idle, shift transmission to neutral, and apply parking brake. Check fluid level on dipstick. Level should register within the crosshatch marks under the conditions as stated in the caution. Change fluid every 12,000 mi (19 200 km), or annually, whichever occurs first (Figure 1-15).

Transfer Case

NOTE: Fill transfer case with 7 pt (3 L) of Dexron® III.

Check transfer case fluid level every 3,000 mi (4 800 km), or semiannually, whichever comes first. Remove fill plug and gasket. Level should be within 1/2 in. (12.7 mm) of fill plug opening when vehicle is level. Install fill plug and gasket, and tighten to 35 lb-ft (48 N•m). Change fluid every 12,000 mi (19 000 km) or annually, whichever occurs first (Figure 1-16).

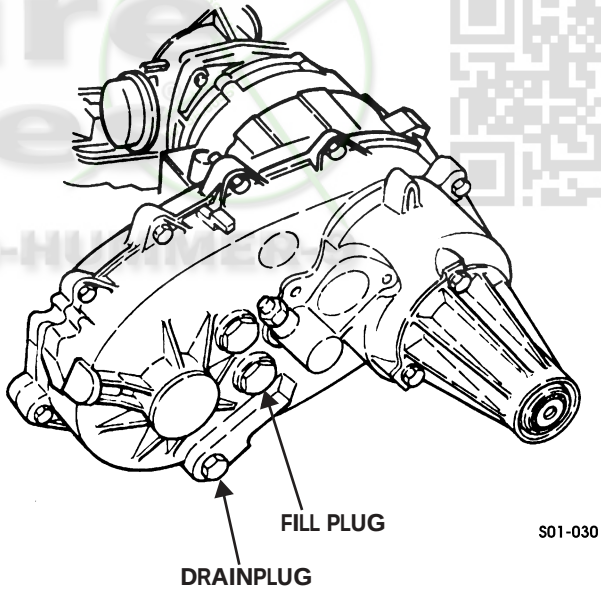

Figure 1-16: Transfer Case

Adventure Accessories
Hummer Parts.com 1-800-HUMMER

Axle and Geared Hub

Check axle and hub lubricant condition and level every 3,000 mi (4 800 km) or semiannually, whichever occurs first.

Geared hub level should be within 1/2 in. (12.7 mm) of fill plug opening when lubricant is cold, or to plug level when hot.

Axle level should be within 1/4 in. (6.4 mm) of fill plug opening when lubricant is cold, or to plug level when hot (Figures 1-17, and 1-18).

Change axle and hub lubricant when contaminated by water or foreign material.

Use GL-5, SAE 80W-90 or 75W-90 gear lubricant only.

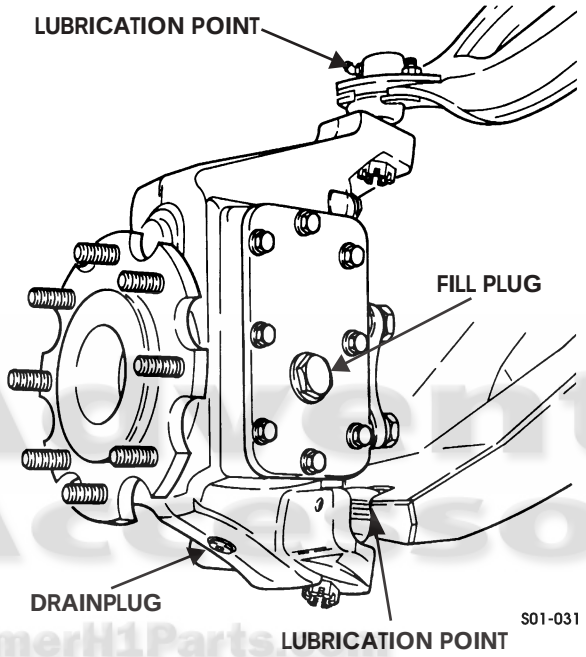

Figure 1-17: Geared Hub Fill/Drain Plug Locations

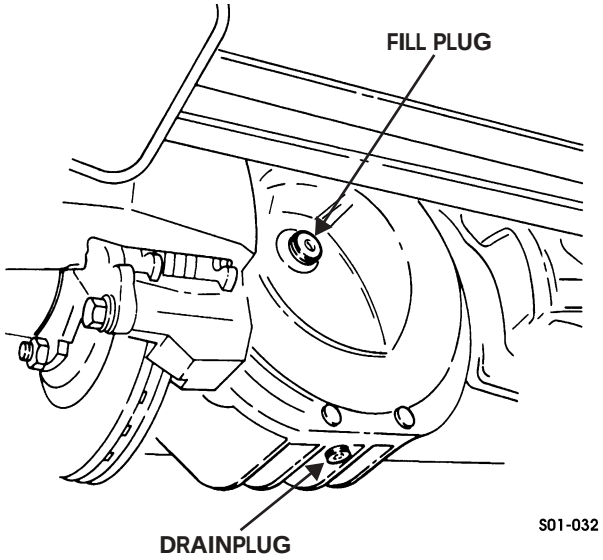

Figure 1-18: Axle Fill/Drain Plug Locations

Universal and Slip Joint Lubrication

Lubricate U-joints with a multipurpose, NLGI-LB grade chassis grease.

Lubricate propeller shaft universal and slip joints every 3,000 mi (4 800 km), or semiannually, whichever occurs first. Use a hand operated or low-pressure air powered lubrication gun. If operating conditions are severe service at 1,000 mi. (1 600 km) intervals.

The rear propeller shaft U-joints have two grease fitting locations (Figure 1-19). The front shaft has four fitting locations (Figure 1-20)

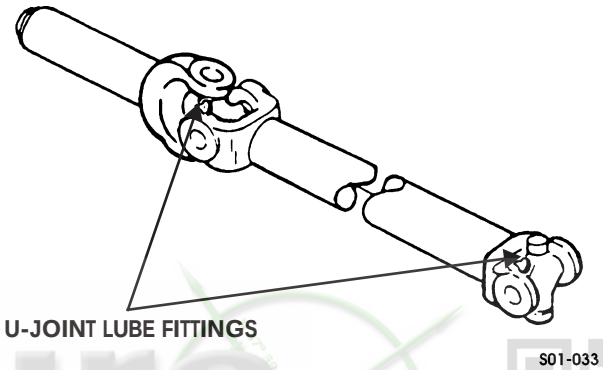

Figure 1-19: Rear Propeller Shaft Lube Points

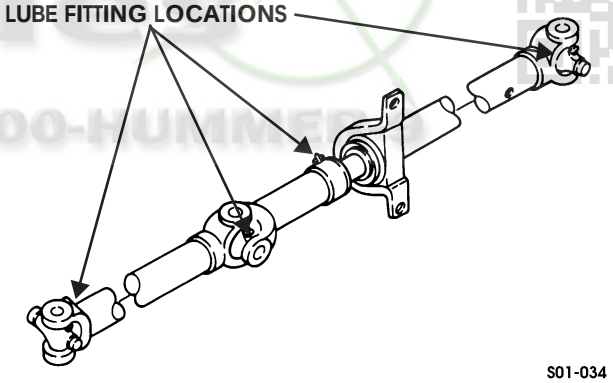

Figure 1-20: Front Propeller Shaft Lube Points

Adventure Accessories
HummerH1PartsDirect 1-800-HUMMER

Steering and Suspension Lubrication Points

Lubricate steering and suspension components every 3,000 mi. (4 800 km), or semiannually, whichever occurs first. If operating conditions are severe, service at 1,000 mi. (1 600 km) intervals.

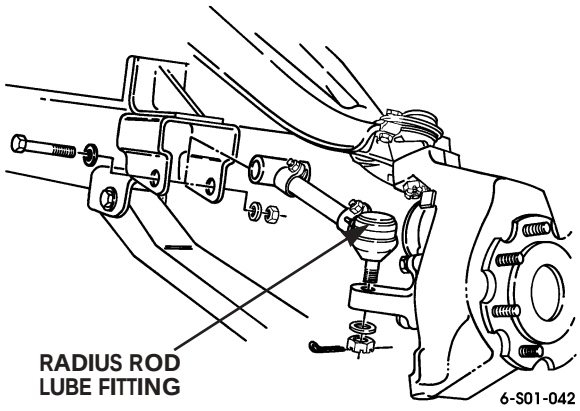

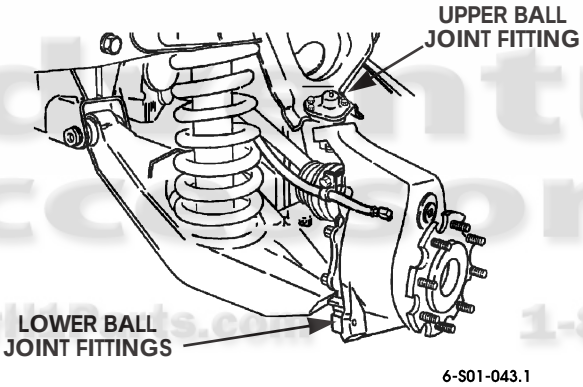

Figure 1-21: Ball Joint/Radius Rod Lube Points

Suspension lube points include the upper and lower ball joints and the rear suspension radius rods (Figure 1-21). Steering lube points include the tie rod ends, idler arm, steering arm, and intermediate steering shaft (Figures 1-22, 1-23, and 1-24). Use a hand operated or low pressure air powered lube gun filled with a multipurpose chassis grease. NLGI-LB classification lubricating grease is recommended.

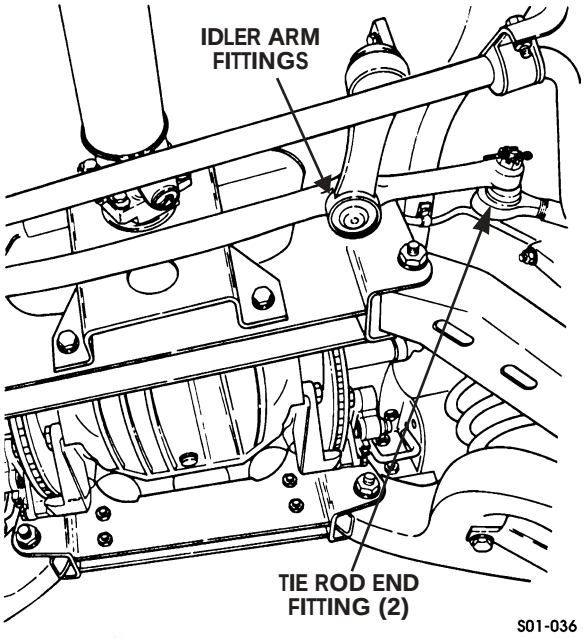

Figure 1-22: Idler Arm and Tie Rod Lube Points

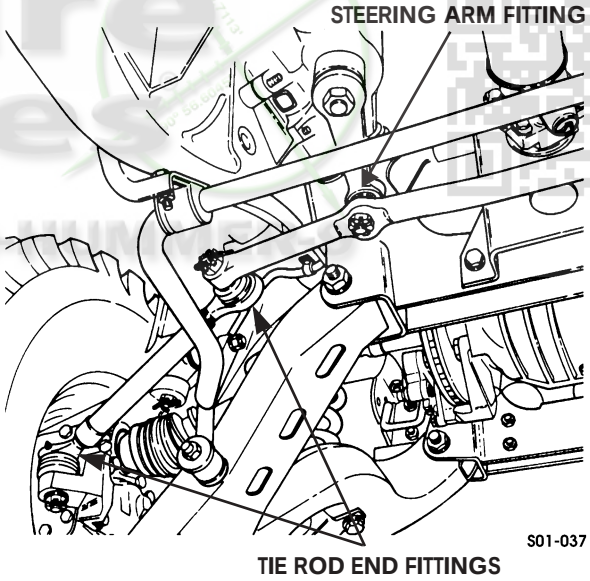

Figure 1-23: Tie Rod and Steering Arm Lube Points

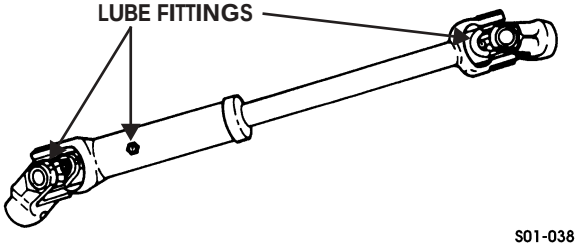

Figure 1-24: Intermediate Steering Shaft Lube Points

Adventure Accessories
HummerHBparts.com 1-800-HUMMER

Steering Hydraulic System

***CAUTION**: Use Dexron® III for filling power steering reservoir. Failure to use Dexron® III will cause damage to power steering system.*

Check the fluid level in the power steering reservoir monthly and adjust level as necessary. If fluid is hot, level should be between "HOT" and "COLD" marks on the cap indicator. If fluid is cool, level should be between "ADD" and "COLD" marks. In either condition, level must be above "ADD" mark (Figure 1-25).

NOTE: Fluid does not require periodic changing.

The steering system with steering cooler has a 1 qt (0.95 L) capacity.

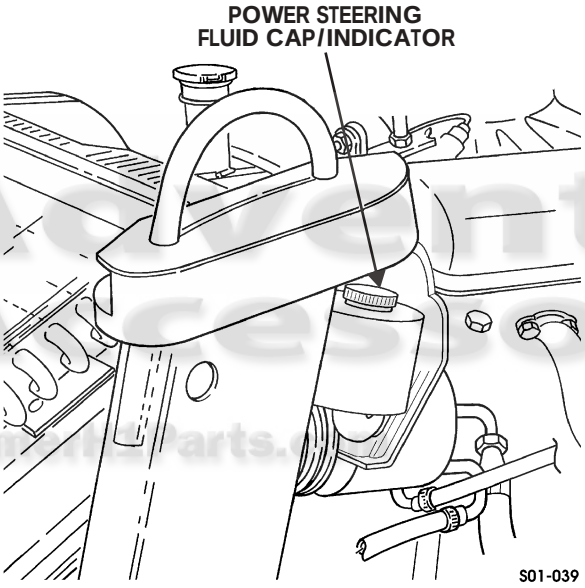

Figure 1-25: Steering Hydraulic System

Cooling System

***CAUTION**: Use the proper antifreeze solution when filling the surge tank. Failure to do so may cause damage to engine.*

Check the fluid level in the surge tank monthly and adjust level as necessary. Level should be at or above the "FULL COLD" line (Figure 1-26).
The cooling system has a 26 qt (25 L) capacity.

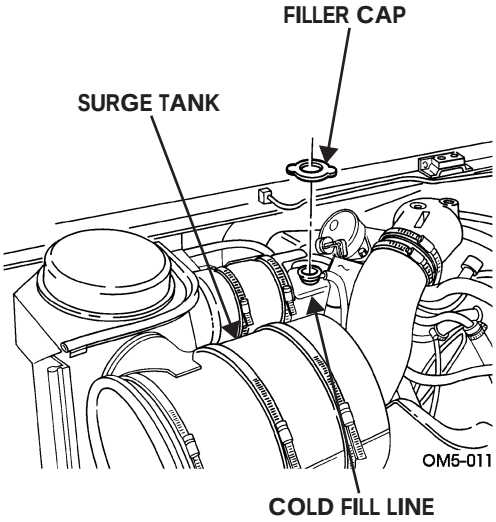

Figure 1-26: Surge Tank

Brake Master Cylinder

***CAUTION**: Use DOT 5 silicone brake fluid for filling brake master cylinder. Failure to use proper fluid may affect brake performance, or cause damage to the brake system.*

NOTE: Fluid does not require periodic changing.

Monthly, check the fluid level in the brake master cylinder. Fill to approximately 1/8 in. (3.2 mm) from top of master cylinder reservoirs (Figure 1-27).

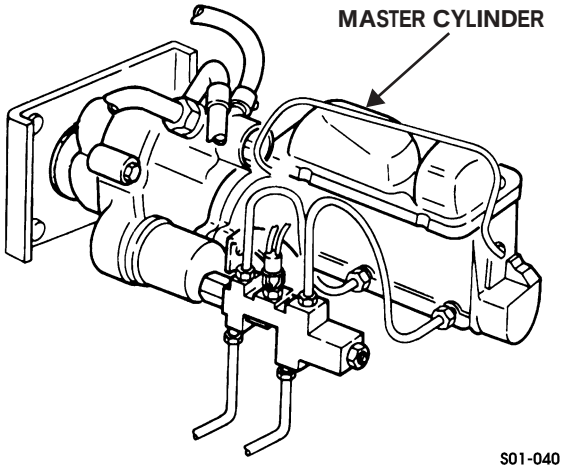

Figure 1-27: Master Cylinder

Adventure Accessories
HummerPartsOnline.com 1-800-HOMMER-9

"Oil Can" Points

Every 3,000 mi (4 800 km), or semiannually, whichever occurs first, perform the following: lubricate hood hinges, hood stops, tailgate hinges, door hinges, door handles, parking brake lever, service brake pedal push rod stud, transfer case shift linkage, and transmission shift linkage with seasonal grade oil (Figure 1-28).

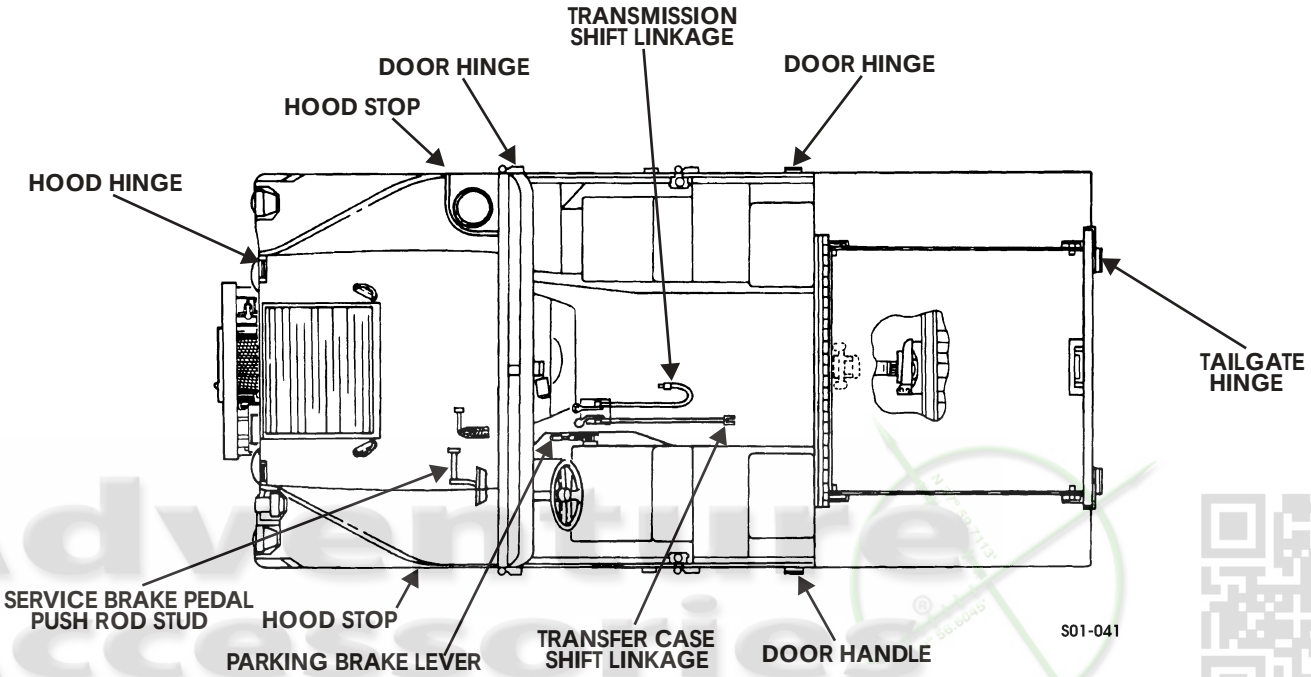

Figure 1-28: "Oil Can" Points

Adventure Accessories
HummerH1Parts.com 1-800-HUMMER-9

Table 1-3: Fluid/Lubricant Capacities and Recommended Temperatures

USAGE	FLUID/LUBRICANT	CAPACITIES	EXPECTED TEMPERATURE
Engine Oil	SAE 30 SAE 10w-30 SAE 15w-40 SG, CE Preferred	Crankcase: W/O filter 7 qt (6.6 L) W/ filter 8 qt (7.6 L) Dry System 10 qt (9.5 L) (INC.: oil cooler)	Hot ambient Cold ambient Most
Engine Coolant	Mixture of Good Quality Antifreeze (Ethylene Glycol Base) and Water 60% Antifreeze/40% Water	Radiator: 7 qt (6.6 L) Complete System: 26 qt (25 L)	40° to -65° F (4° to -54° C)
Brake System	DOT 5 Silicone Brake Fluid	Master Cylinder: 0.69 pt (0.33 L) Complete System: 1.2 pt (0.56 L)	All Temperatures
Transmission	Dexron® III	Dry: 13.5 qt (12.8 L) Drain & Refill: 7.7 qt (7.3 L)	All Temperatures

Transfer Case	Dexron® III	7 pt (3 L)	All Temperatures
Steering System	Dexron® III	1 qt (0.95 L)	All Temperature
Geared Hub (4)	Multipurpose Gear Oil, SAE 80w-90	1 pt ea (0.47 L)	All Temperatures
Axles (2)	Multipurpose Gear Oil, SAE 80w-90	2 qt ea (1.9 L)	All Temperatures
Ball Joints, Tie Rod Ends, Pitman Arm, Propeller Shafts, etc.	General Automotive Chassis Grease	As Required	All Temperatures
Hinges, Cables, and Linkages	General Purpose Lubricating Oil	As Required	All Temperatures
A/C System	Refrigerant Oil— Polyalkylene Glycol (PAG) oil R134a	Complete System 8 fl oz (237 ml) System W/O Aux A/C 1 lb (.45 kg) W/ Aux A/C 1.2 lb (.54 kg)	All Temperatures All Temperatures

NOTE: All intervals are based on normal operations.

Adventure Accessories®
HummerH1Parts.com 1-800-HUMMER-9

GENERAL MAINTENANCE INFORMATION

This section explains the maintenance services necessary for proper operation, safety, and performance of the HUMMER. It is very important to perform these services at the proper scheduled interval. In addition to the scheduled maintenance, it is also necessary to perform maintenance at unscheduled intervals. All scheduled and unscheduled intervals may be affected by the type of environment in which the vehicle has been driven. For example, if the vehicle is operated in severe or unusual conditions, more frequent attention should be paid to all servicing requirements.

Operating in Severe Conditions

Operating the HUMMER in severe or unusual conditions, such as fording operations, rough terrain, or on dusty, wet, or muddy surfaces will require more frequent maintenance. The following maintenance should be performed on a daily basis immediately after vehicle operation, or as soon as possible.

1. Using low pressure water, wash all underbody components, including brake components. Inspect all underbody components for general condition and security of mounting.
2. Check all fluids levels. If evidence of contamination is present, drain and replenish fluid and check seals and gaskets for damage.
3. Lubricate all grease fittings and “oil can” points.
4. Clean or replace the air filter assembly and dump valve.
5. After fording, lubricate zerk fitting on accelerator linkage.

RECOMMENDED MAINTENANCE SCHEDULE

NOTE: When performing the recommended maintenance, refer to the appropriate section of this service manual for proper instructions on repair, lubrication, and specifications.

Routine maintenance performed periodically will greatly improve the longevity and reliability of the vehicle. It is very important to perform these services at the recommended intervals. The service intervals may be affected by the type of environment in which the vehicle is operated. For example, operating in mud or sand will require more frequent lubrication and fluid servicing. When performing the following maintenance services, be sure that all necessary replacement parts are installed and that the proper fluid and lubricants are used.

Maintenance “A” consists of the following checks and inspections:

- Check fluid levels of power steering pump, cooling system, brakes, transmission and transfer case.
- Check CDR valve for oil saturation.
- Inspect control arms, springs, and shock absorbers for damage.
- Check tire and runflat wheel balance.
- Check and lubricate all grease fittings and “oil can” points.
- Check geared hubs for leaking seals and damage; check fluid level.
- Check axle for leaking seals and damage; check fluid level.
- Check wheel bolt and nut torque.
- Inspect geared hub and axle vent lines for cracks and deterioration.
- Inspect transmission and transfer case vent lines for deterioration.
- Inspect U-joints for free play and missing or damaged grease fittings.
- Inspect transmission and transfer case shift linkages for bends or excessive play.
- Inspect accelerator linkage for bends or excessive play.
- Inspect engine mounts and insulators for poor fit, wear, or damage.

Maintenance “B” consists of the following checks and inspections:

- Inspect fuel injection pump, lines, and fittings for leaks or damage.
- Check and clean batteries.
- Inspect all belts and hoses.
- Inspect exhaust system and shields.
- Inspect and rotate tires.
- Check wheel alignment.
- Inspect halfshaft boots and ball joint seals.
- Inspect steering column, U-joints, tie rods or radius rods, pitman arm, center link, and idler arm for wear or damage.
- Check fuel tank vent line filter.
- Inspect frame rails and crossmembers for cracks, breaks, bends, and missing or loose fasteners.

Maintenance “C” consists of the following checks and inspections:

- Inspect surge tank, radiator and shroud, power steering cooler, and all hoses and fittings for security of mounting, leaks, or damage.
- Inspect fuel tank, lines, and cap.
- Inspect all wiring harnesses for frays, splits, missing insulation, or poor connections.
- Inspect power steering pump, power steering gear, hoses, lines, and fittings for leaks or damage.

WARNING: Perform maintenance on the HUMMER only if you have both the required skill and the necessary tools.

NOTE: Clean all dirt from caps and surrounding areas before opening to check fluids.

Adventure Accessories
HummerH1Parts.com 1-800-400-HMMR

3,000 Miles (4 800 km)

- ❒ Change engine oil and replace filter
- ❒ Perform items in Maintenance “A”

6,000 Miles (9 600 km)

- ❒ Change engine oil and replace filter
- ❒ Clean or replace air filter
- ❒ Replace fuel filter
- ❒ Perform items in Maintenance “A”
- ❒ Perform items in Maintenance “B”

9,000 Miles (14 400 km)

- ❒ Change engine oil and replace filter
- ❒ Perform items in Maintenance “A”

12,000 Miles (19 000 km)

- ❒ Change engine oil and replace filter
- ❒ Clean or replace air filter
- ❒ Replace fuel filter
- ❒ Service cooling system/change coolant
- ❒ Change transmission fluid and transfer case fluid
- ❒ Perform items in Maintenance “A”
- ❒ Perform items in Maintenance “B”
- ❒ Perform items in Maintenance “C”

15,000 Miles (24 000 km)

- ❒ Change engine oil and replace filter
- ❒ Perform items in Maintenance “A”

18,000 Miles (29 000 km)

- ❒ Change engine oil and replace filter
- ❒ Clean or replace air filter
- ❒ Replace fuel filter
- ❒ Perform items in Maintenance “A”
- ❒ Perform items in Maintenance “B”

21,000 Miles (33 500 km)

- ❒ Change engine oil and replace filter
- ❒ Perform items in Maintenance “A”

24,000 Miles (38 000 km)

- ❒ Change engine oil and replace filter
- ❒ Clean or replace air filter
- ❒ Replace fuel filter
- ❒ Service cooling system/change coolant
- ❒ Change transmission fluid and transfer case fluid
- ❒ Perform items in Maintenance “A”
- ❒ Perform items in Maintenance “B”
- ❒ Perform items in Maintenance “C”

27,000 Miles (43 000 km)

- ❒ Change engine oil and replace filter
- ❒ Perform items in Maintenance “A”

30,000 Miles (48 000 km)

- ❒ Change engine oil and replace filter
- ❒ Clean or replace air filter
- ❒ Replace fuel filter
- ❒ Perform items in Maintenance “A”
- ❒ Perform items in Maintenance “B”

33,000 Miles (53 000 km)

- ❒ Change engine oil and replace filter
- ❒ Perform items in Maintenance “A”

36,000 Miles (58 000 km)

- ❒ Change engine oil and replace filter
- ❒ Clean or replace air filter
- ❒ Replace fuel filter
- ❒ Service cooling system/change coolant
- ❒ Change transmission fluid and transfer case fluid
- ❒ Perform items in Maintenance “A”
- ❒ Perform items in Maintenance “B”
- ❒ Perform items in Maintenance “C”

39,000 Miles (62 500 km)

- ❒ Change engine oil and replace filter
- ❒ Perform items in Maintenance “A”

42,000 Miles (67 000 km)

- ❒ Change engine oil and replace filter
- ❒ Clean or replace air filter
- ❒ Replace fuel filter
- ❒ Perform items in Maintenance “A”
- ❒ Perform items in Maintenance “B”

45,000 Miles (72 000 km)

- ❒ Change engine oil and replace filter
- ❒ Perform items in Maintenance “A”

48,000 Miles (77 000 km)

- ❒ Change engine oil and replace filter
- ❒ Clean or replace air filter
- ❒ Replace fuel filter
- ❒ Service cooling system/change coolant
- ❒ Change transmission fluid and transfer case fluid
- ❒ Perform items in Maintenance “A”
- ❒ Perform items in Maintenance “B”
- ❒ Perform items in Maintenance “C”

51,000 Miles (81 000 km)

- ❒ Change engine oil and replace filter
- ❒ Perform items in Maintenance “A”

54,000 Miles (85 000 km)

- ❒ Change engine oil and replace filter
- ❒ Clean or replace air filter
- ❒ Replace fuel filter
- ❒ Perform items in Maintenance “A”

Adventure Accessories
Hummer-H1Parts.com
1-800-HUMMER-9

❒ Perform items in Maintenance “B”

UNSCHEDULED MAINTENANCE

Unscheduled maintenance is any maintenance not mentioned in the section called “Recommended Maintenance Schedule” that is necessary to preserve the performance, dependability, and appearance of the HUMMER. Unscheduled maintenance is usually indicated by a change in the handling, performance, or appearance of the vehicle. Prompt action on unscheduled maintenance can save on costly repairs later. The following are some inspections and services that can help detect when unscheduled maintenance is necessary.

While Driving the Vehicle

1. Check to see if the starter engages smoothly.
2. Listen for unusual engine noise at idle, at operating speeds, and under acceleration.
3. Check to see if the transmission shifts smoothly in all speed ranges.
4. Notice if the transfer case shifts smoothly in all gear ranges.
5. Notice any vibrations of the steering wheel while driving at highway speeds. If vibration is noticed, wheel balancing or front end work may be needed. Notice any pulling of the vehicle to either side of the road. This could indicate a tire with low pressure or the need for a wheel alignment.
6. Notice any changes in steering, such as excess sway, difficult turning, or unstable handling. Any of these conditions could indicate a problem with the steering system and should be inspected and repaired immediately.
7. Notice any abnormal sounds or if vehicle pulls to one side while braking. Also, notice any increase in brake pedal travel or if brake pedal is hard to push. Any of these conditions could indicate a problem in the brake system and should be inspected and repaired immediately.
8. Check parking brake operation by bringing vehicle to a full stop, engaging parking brake while transmission is still in D (drive), and letting off service brake. Vehicle should remain stationary. If vehicle moves, adjust parking brake lever.
9. Listen for any changes in the sound of the exhaust system be wary of any exhaust odors. Either of these situations may indicate a leak in the exhaust system.

Dealer/Owner Inspection and Services

The following are vehicle inspections and services that should be performed periodically by the owner of the vehicle or by a qualified technician whenever the vehicle is brought in for service.

1. Check fluid level in power steering pump reservoir and add as necessary.
2. Check fluid level in brake master cylinder reservoir and add as necessary. A low fluid level suggests worn disc brake pads that may need to be serviced.
3. Check alignment of head lamps and adjust as necessary.
4. Inspect all seatbelts for any noticeable damage. Check all attaching hardware for security of mounting. Check all retractors, latch plates, belt buckles, and release buttons for proper operation. Inspect belts for any rips, tears, or signs of wear. If damaged, have authorized service center perform repair immediately.

WARNING: Engage parking brake and apply service brake before performing the following operational check. Also, ensure there is adequate room around the vehicle. Be prepared to turn off ignition if engine starts. If these precautions are not followed, vehicle could move without warning, causing personal injury or damage to equipment.

5. Check operation of neutral safety switch by attempting to start the vehicle in all forward gears and reverse. Vehicle should only start when transmission is in neutral or park positions.
6. Check operation of steering column lock by attempting to turn the key to the LOCK position in each gear range. The key should turn to LOCK only when the gear selector is in the park position. The ignition key should only come out when the gear selector is in the park position.

Authentic HUMMER Accessories
HummerHTParts.com 1-800-HUMMER-9

RAISING AND SUPPORTING THE VEHICLE

WARNING: Hydraulic jacks are used for raising and lowering, and are not used to support vehicle. Never work under vehicle unless wheels are blocked and vehicle is properly supported. Personal injury or damage to equipment may result if vehicle suddenly shifts or moves.

Raising Corner of Vehicle

1. Block wheels.
2. Place jack under lower control arm on corner to be raised (Figure 1-29).
3. Raise vehicle high enough to place jack stand under flat portion of frame rail, and lower the jack until vehicle weight is supported (Figure 1-30).

Lowering Corner of Vehicle

1. Raise vehicle and remove jack stand (Figure 1-29).
2. Lower vehicle.
3. Remove blocks from wheels.

Raising Front of Vehicle

1. Block rear wheels.
2. Center jack under front suspension front crossmember. Use a wood block between jack and crossmember.
3. Raise vehicle high enough to place jack stands under flat portion of frame rails, and lower the jack until vehicle weight is supported (Figure 1-30).

Lowering Front of Vehicle

1. Raise vehicle and remove jack stands (Figure 1-30).
2. Lower vehicle.
3. Remove blocks from rear wheels.

Raising Rear of Vehicle

1. Block front wheels.
2. Center jack under rear suspension rear crossmember. Use a wood block between jack and crossmember (Figure 1-29).
3. Raise vehicle high enough to place jack stands under flat portion of frame rails, and lower the jack until vehicle weight is supported (Figure 1-30).

Lowering Rear of Vehicle

1. Raise vehicle and remove jack stands (Figure 1-29).
2. Lower vehicle.
3. Remove blocks from front wheels.

Adventure Accessories®
HummerH1Parts.com
1-800-HUMMER-9

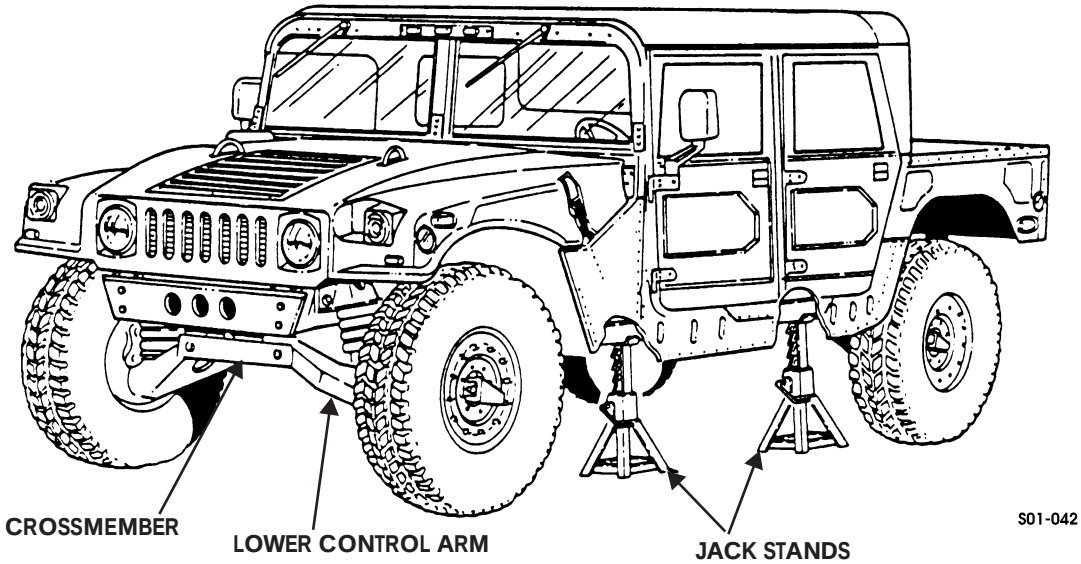

Figure 1-29: Placement of Jack Stands

Raising Entire Vehicle

1. Raise front of vehicle.
2. Center jack under rear suspension rear crossmember. Use a wood block between jack and crossmember (Figure 1-30).
3. Raise vehicle high enough to place jack stands under flat portion of frame rails, and lower the jack until vehicle weight is supported.

Lowering Entire Vehicle

1. Raise rear of vehicle and remove jack stands (Figure 1-30).
2. Lower rear of vehicle and block rear wheels.
3. Lower front of vehicle.

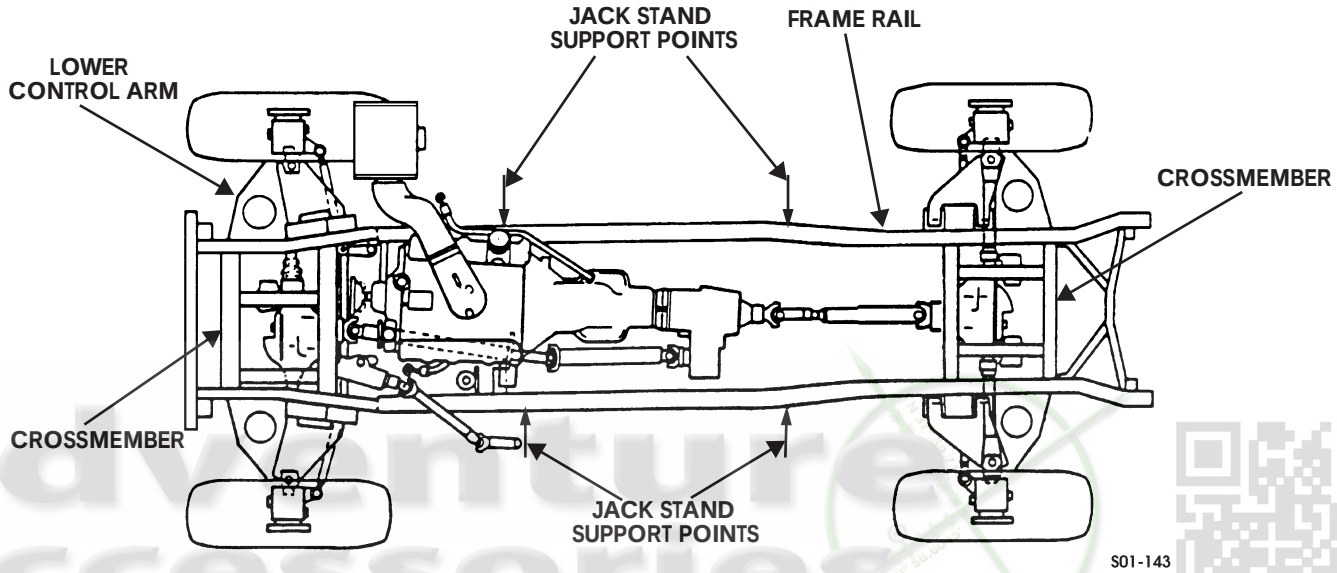

Figure 1-30: Jack Stand Support Points and Frame Overview

Adventure Accessories
HummerH1Parts.com 1-800-HUMMER-9

TOWING

***CAUTION**: HUMMERS are equipped with full-time, four-wheel drive. Ensure transmission and transfer case are in neutral during all towing operations. Do not exceed a towing speed of 30 mph (48 kph), or a towing distance of 30 mi (48 km), without first removing the front propeller shaft and/or rear propeller shaft as specified in Table1-4. Failure to remove the necessary propeller shafts may result in damage to the transmission and/or transfer case.*

It is recommended that the HUMMER be towed by a vehicle carrier or a wheel lift tow truck. These types of towing are least likely to cause any damage to the vehicle during towing operation. If necessary, however, the vehicle may be towed by a conventional sling tow truck. This section outlines the recommended front and rear lift points and sling towing instructions.

***CAUTION**: If possible, always unload the vehicle before towing to prevent any load movement or shifting. If the vehicle must be towed with a load, ensure the load is properly secured.*

***CAUTION**: Although multiple towing methods exist, always use safety chains and towbars whenever possible to help prevent vehicle damage if the wrecker lifting devices fail.*

Adventure Accessories
HummerHParts.com 1-800-

Table 1-4

Vehicle Towing Mode	Prop Shafts
Rear wheels up	Front off
Front wheels up	Rear off
Four wheels on ground	Front and rear off

Towing Vehicle From Front (Front Wheels Up)

***CAUTION**: If the vehicle is equipped with tiedown shackles on the front bumper, do not use the shackles as lifting points. The shackles do not provide solid structural lifting points and the vehicle could be damaged.*

NOTE: Ensure the sling assembly is tight against the front bumper of the vehicle before attaching the wrecker chain assemblies.

1. Loop the wrecker chain assembly around both front lower control arms and secure the chain assemblies to the sling assembly (Figure 1-31).
2. Slide a 4 in. x 4 in. x 48 in. wood crossbeam between the underbody of the vehicle and the chain assembly. This will help prevent any damage caused by the chain assembly.
3. If the towing speed is over 30 mph (48 kph), or the towing distance is expected to exceed 30 mi (48 km), remove the rear propeller shaft.

***CAUTION**: Prior to towing the vehicle, ensure transmission and transfer case shift levers are in NEUTRAL. Failure to do this will damage the transmission and transfer case.*

4. Place the transmission and transfer case shift levers in N.

***CAUTION**: Prior to towing the vehicle, ensure the parking brake lever is released. Failure to do this will result in rapid brake wear.*

5. Release the parking brake lever.
6. Proceed with towing operation.

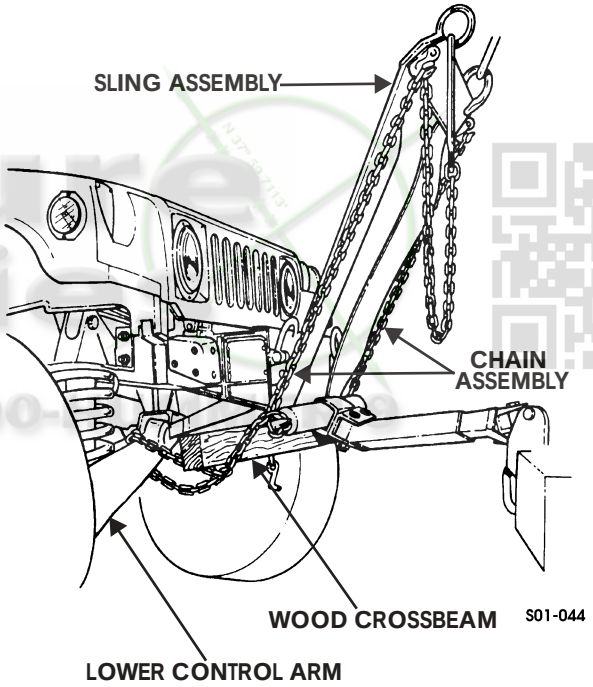

Figure 1-31: Towing From the Front

Towing Vehicle From Rear (Rear Wheels Up)

***CAUTION**: If the vehicle is equipped with tiedown shackles on the rear bumper, do not use the shackles as lifting points. The shackles do not provide solid structural lifting points, and the vehicle could be damaged.*

NOTE: If the vehicle is equipped with a spare tire and wheel assembly mounted to the carrier, remove the spare tire and wheel assembly before attaching towing components.

NOTE: Ensure the sling assembly is tight against the rear bumper of the vehicle before attaching the wrecker chain assemblies.

1. Loop the wrecker chain assemblies around both rear lower control arms and secure the chain assemblies to the sling assembly. If the vehicle is loaded, loop the chain assemblies around the frame rails (Figure 1-32).
2. Slide a 4 in. x 4 in. x 48 in. wood crossbeam between the rear bumper of the vehicle and the chain assemblies. This will help prevent any damage caused by the chain assemblies.
3. If the towing speed is over 30 mph (48 kph), or the towing distance is expected to exceed 30 mi (48 km), remove the front propeller shaft.

***CAUTION**: Prior to towing the vehicle with the rear wheels up, secure the steering wheel to prevent the front wheels from turning. Failure to do this may cause damage to the vehicle.*

4. Secure the steering wheel.

***CAUTION**: Prior to towing the vehicle, ensure transmission and transfer case shift levers are in NEUTRAL. Failure to do this will damage the transmission and transfer case.*

5. Place the transmission and transfer case shift levers in N.

***CAUTION**: Prior to towing the vehicle, ensure the parking brake lever is released. Failure to do so will result in rapid brake wear.*

6. Release the parking brake lever.
7. Proceed with towing operation.

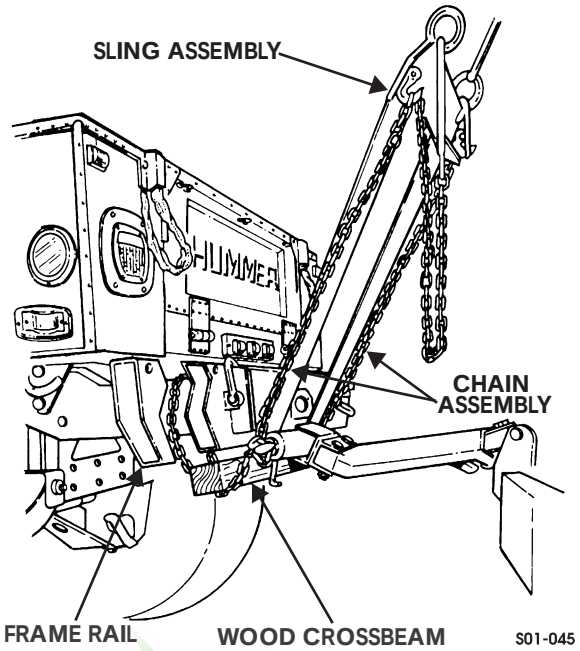

Figure 1-32: Towing From the Rear

JUMP STARTING

WARNING: Batteries emit explosive hydrogen gas. Keep flames or sparks away from batteries. Battery acid is extremely harmful. If acid contacts eyes or skin, flush affected area(s) liberally with clear water and seek medical help immediately. If acid contacts clothing, remove and discard affected clothing. Remove all jewelry before working on vehicle.

1. Set parking brake and place transmission in PARK. Turn off the ignition, lights, and all other electrical loads.

***CAUTION**: When jump starting the vehicle with charging equipment, ensure equipment used is 12-volt and negative ground. Do not use 24-volt charging equipment. Using such equipment can cause serious damage to the electrical system or electronic parts.*

2. Connect one end of the positive (+) jumper cable to the positive (+) battery cable bolt or terminal of the booster battery (Figure 1-33).

Adventure Accessories
HummerParts.com 1-800-Hummer-3

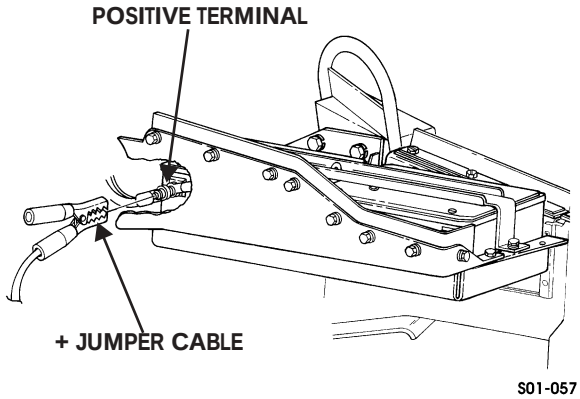

Figure 1-33: Jumper Cable

3. Connect the other end of the positive (+) jumper cable to the positive (+) battery cable bolt or terminal of the discharged battery or power stud.
4. Connect one end of the negative (–) jumper cable to the negative (–) battery cable bolt or terminal of the booster battery.

NOTE: Do not connect jumper cable directly to the negative terminal of the dead battery.

5. Connect the other end of the negative (–) jumper cable to a solid ground (such as the alternator mounting bracket (Figure 1-34).
6. Start the engine of the vehicle that is providing the jump start and turn off electrical accessories. Then start the engine in the vehicle with the discharged battery.
7. Reverse steps 2 through 5 exactly when removing the jumper cables. The negative cable must be disconnected from the engine that was jump started first.

***CAUTION**: If the vehicle fails to start within a maximum time of 12 seconds, turn the ignition off and investigate the cause. Failing to follow this instruction could result in damage to equipment.*

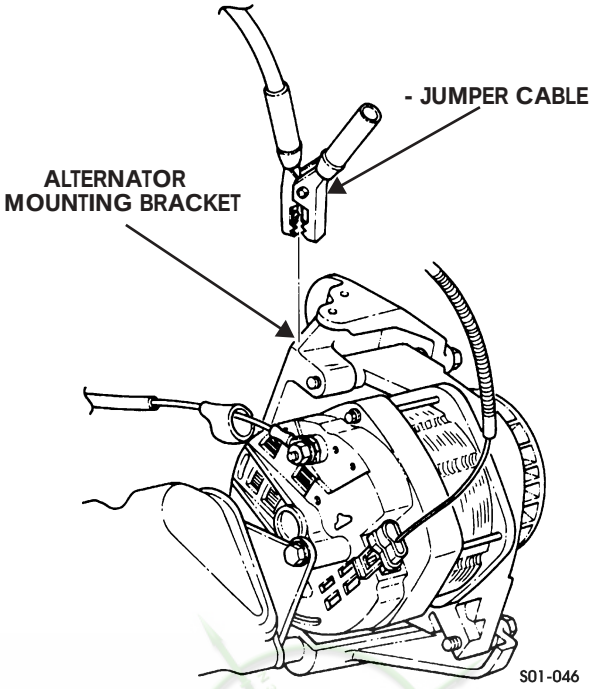

Figure 1-34: Alternator Mounting Bracket

Adventure Accessories
HummerHPparts.com 1-800-HUMMER-9

Transporting Vehicle by Trailer

***CAUTION**: Underbody components must not be used as tiedown points.*

NOTE: Any of the four loops located on each frame rail may be used to secure the vehicle to a trailer. Do not use bumper shackles or trailer hitch.

Load vehicle on trailer and secure. Ensure vehicle has parking brake applied, transmission lever is in PARK, and transfer case shift lever is in NEUTRAL (Figure 1-35).

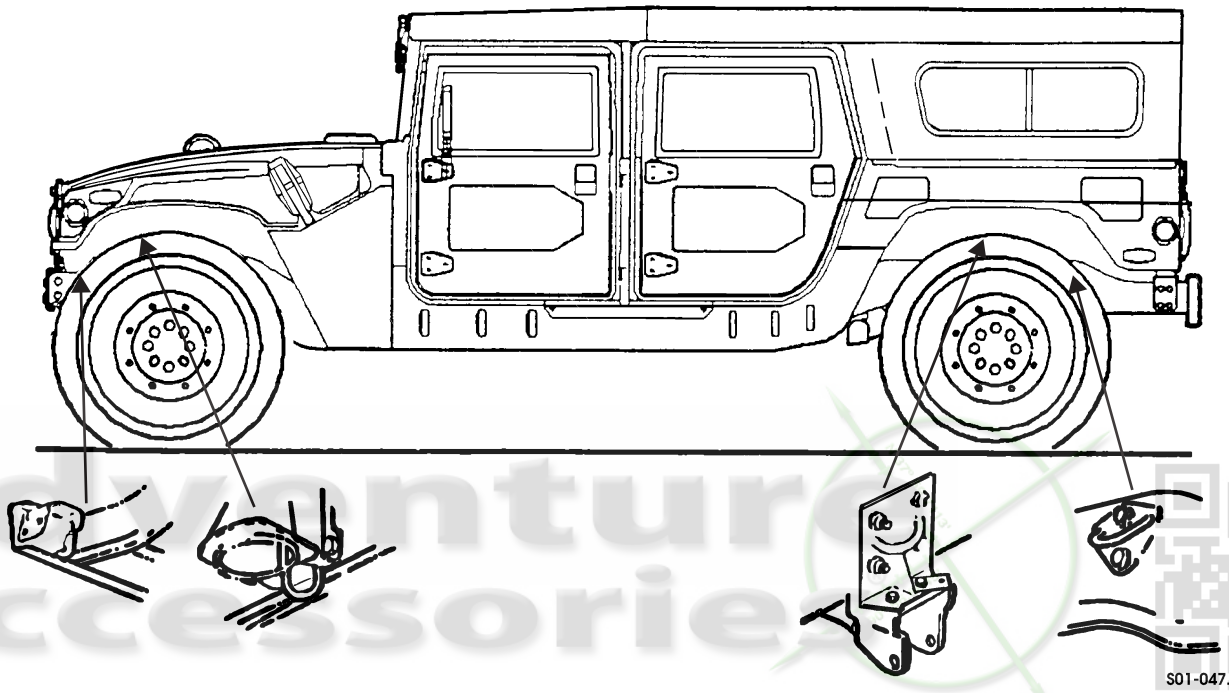

Figure 1-35: Transporting Vehicle By Trailer

Adventure Accessories
HummerH1Parts.com 1-800-HUMMER-9

ENGINE OIL DIPSTICK TUBE REPLACEMENT

Removal

1. Remove dipstick from dipstick tube (Figure 1-36).
2. Remove nut and lockwasher assembly, capscrew, and harness clamp from upper dipstick tube bracket. Discard nut and lockwasher assembly.
3. Remove two screw-assembled washers and upper dipstick tube bracket from fuel line bracket.
4. Remove socket-head screw, washer, and lower dipstick tube bracket from exhaust manifold.
5. Remove dipstick tube from oil pan. Discard O-ring seal.

Installation

1. Apply silicone sealant to O-ring seal, and install O-ring seal on dipstick tube (Figure 1-36).
2. Position dipstick tube in oil pan.
3. Install lower dipstick tube bracket on exhaust manifold with washer and socket-head screw. Tighten screw to 18-25 lb-ft (24-34 N•m).
4. Install upper dipstick tube bracket on fuel line bracket with two screw-assembled washers. Tighten screw-assembled washers to 3-4 lb-ft (4-5 N•m).
5. Install harness clamp on upper dipstick tube bracket with capscrew and nut and lockwasher assembly.
6. Install dipstick in dipstick tube.
7. Start engine and check for oil leaks.

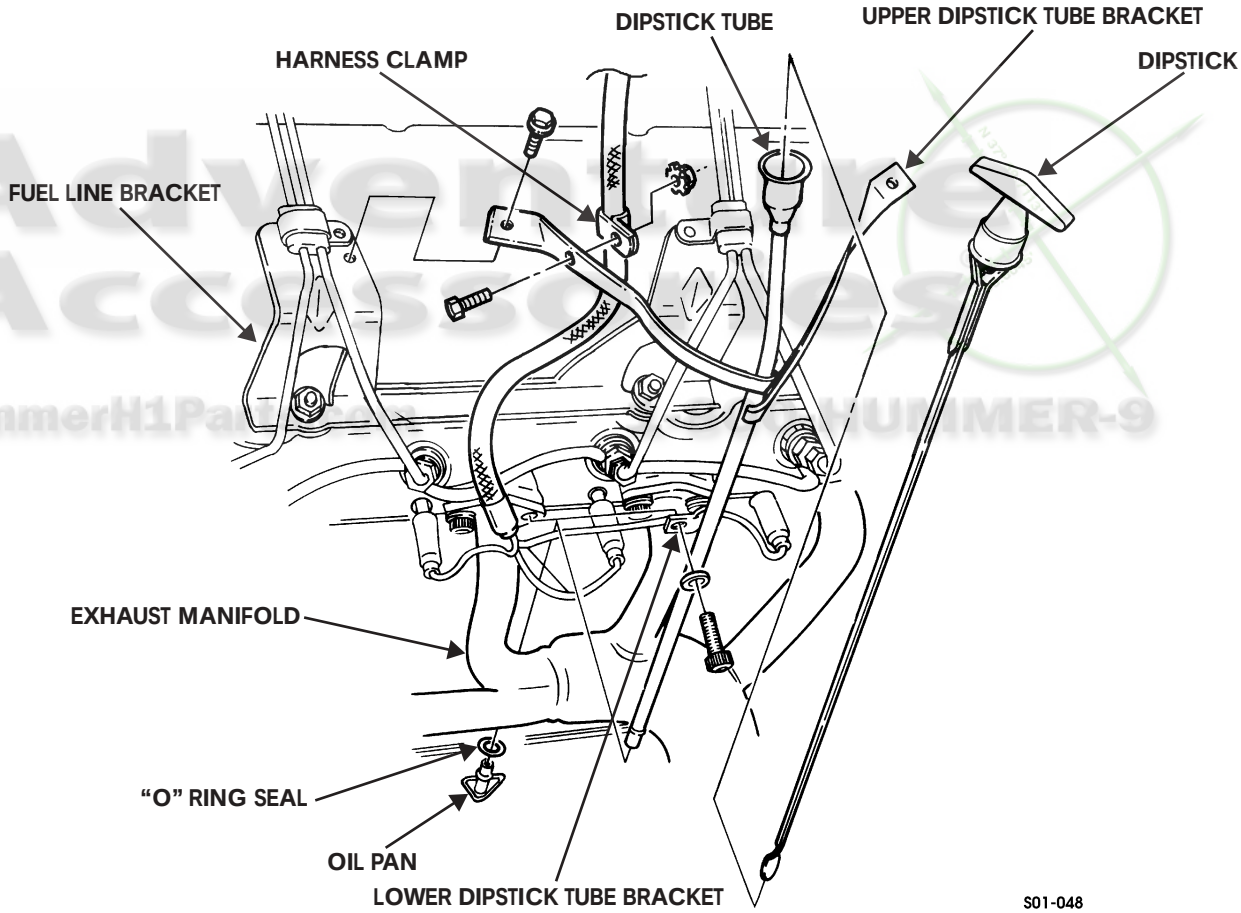

Figure 1-36: Engine Oil Dipstick Tube

Adventure Accessories
HummerH1Parts.com HUMMER-9

ENGINE OIL FILLER TUBE MAINTENANCE

Removal

Remove two nuts, washers, and oil filler tube from timing chain cover (Figure 1-37).

Cleaning and Inspection

NOTE: Clean all components, examine for wear or damage, and replace if necessary.

Inspect grommet for breaks or cracks.

Installation

1. Coat grommet with lubricating oil (Figure 1-37).
2. Install oil filler tube on timing chain cover with two washers and nuts. Tighten nuts to 13-20 lb-ft (18-27 N•m).

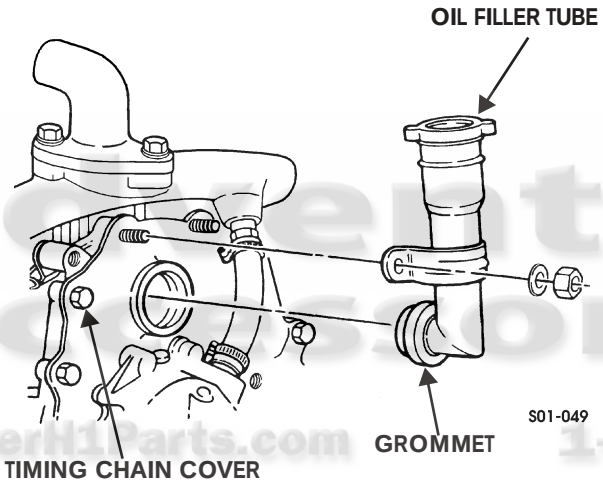

Figure 1-37: Engine Oil Filler Tube

ENGINE OIL FILTER ADAPTER MAINTENANCE

Removal

1. Remove engine oil filter.
2. Remove adapter bolt, gasket, and two O-ring seals securing oil filter adapter to cylinder block. Discard gasket and O-ring seals (Figure 1-38).
3. Remove oil filter adapter and seal. Discard seal.
4. Remove reducer boss from oil filter adapter.

Cleaning and Inspection

NOTE: Clean all components, examine for wear or damage, and replace if necessary.

Inspect reducer boss for damaged threads or cracks (Figure 1-38).

Installation

1. Install reducer boss into oil filter adapter. Tighten boss to 25 lb-ft (34 N•m) (Figure 1-38).
2. Install seal and oil filter adapter on cylinder block. Secure with two O-ring seals, gasket, and adapter bolt. Tighten adapter bolt to 50 lb-ft (68 N•m).
3. Install engine oil filter.

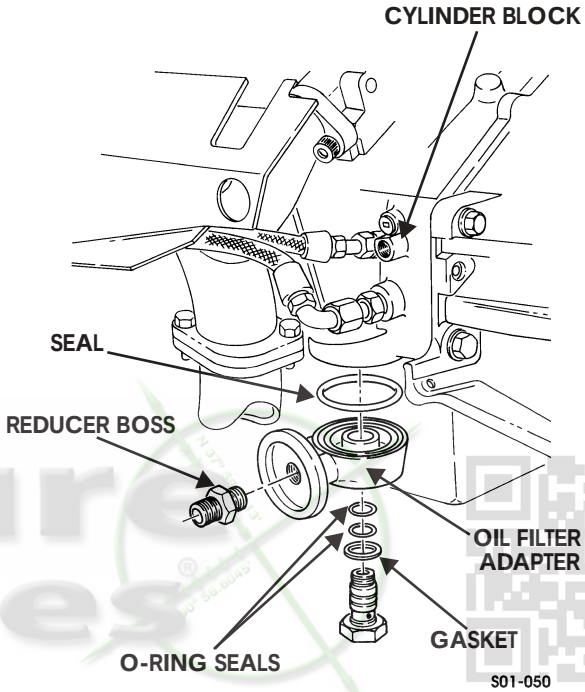

Figure 1-38: Engine Oil Filler Adapter

Adventure Accessories
HummerH1Parts.com 1-800-HUMMER-9

ENGINE OIL SERVICE

Draining

1. Remove drainplug and gasket from oil pan. Drain oil completely (Figure 1-39).
2. Install gasket and drainplug. Tighten drainplug to 20 lb-ft (27 N•m).

Filter Removal

Remove oil filter from filter adapter. Discard oil filter (Figure 1-39).

Filter Installation

1. Apply a light coat of oil to filter gasket (Figure 1-39).
2. Install oil filter on filter adapter. Tighten by hand until gasket contacts filter adapter. Tighten an additional 1/2 to 3/4 turn by hand.

Replenishing

Fill engine with oil to proper level.

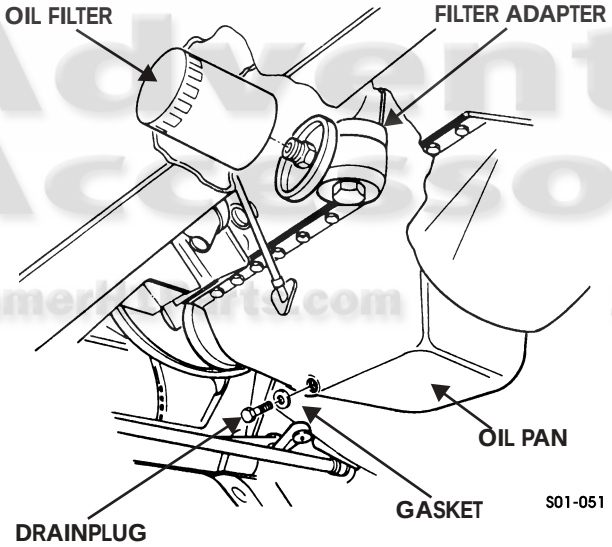

Figure 1-39: Oil Filter

OIL PAN MAINTENANCE

Removal

1. Remove starter (Section 2).
2. Remove oil dipstick tube.
3. Remove torque converter housing cover (Section 5).
4. Drain engine oil.
5. Remove two nut and lockwasher assemblies and starter cable support bracket from studs. Discard nut and lockwasher assemblies (Figure 1-40).

NOTE: Mark location of screws for installation.

6. Remove twenty capscrews, two large capscrews, studs, and oil pan from cylinder block.
7. Remove oil pan rear seal. Discard seal.

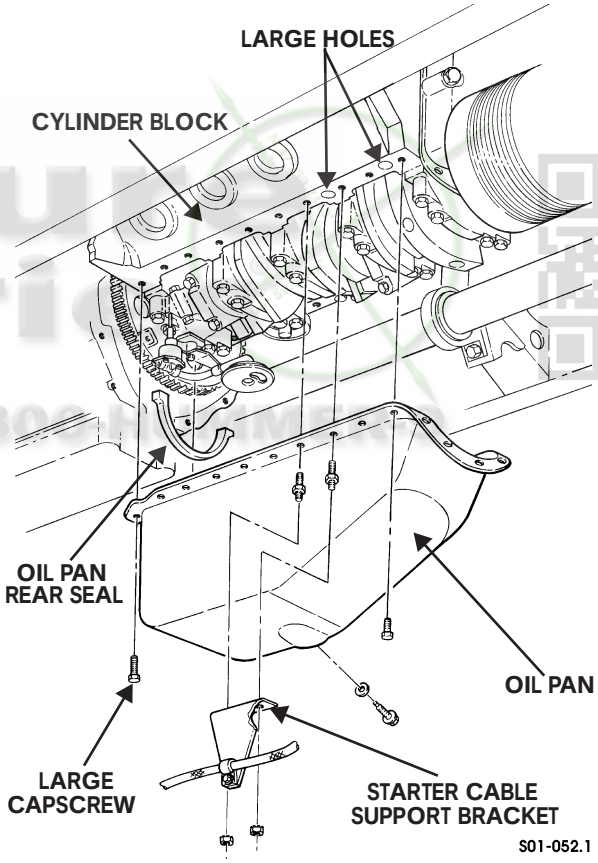

Figure 1-40: Oil Pan

Cleaning and Inspection

NOTE: Clean all components, examine for wear or damage, and replace if necessary.

Clean any sealant remains from oil pan and cylinder block mounting surfaces (Figure 1-40).

Adventure Accessories
HummerParts.com 1-800-HUMMER

Installation

1. Install oil pan rear seal on oil pan (Figure 1-40).

NOTE: Install oil pan immediately after sealant application.

2. Apply a 3/16 in. (5 mm) bead of silicone sealant around two large holes on cylinder block and around oil pan sealing surface (Figures 1-40, and 1-41).
3. Install oil pan on cylinder block with two studs, large capscrews, and twenty capscrews. Tighten large capscrews to 13-20 lb-ft (18-27 N•m). Tighten studs and capscrews 4-10 lb-ft (5-14 N•m) (Figure 1-40).
4. Install starter cable support bracket on studs with two nut and lockwasher assemblies.
5. Install torque converter housing cover (Section 5).
6. Install oil dipstick tube.
7. Install starter (Section 2).
8. Replenish engine oil to proper level.

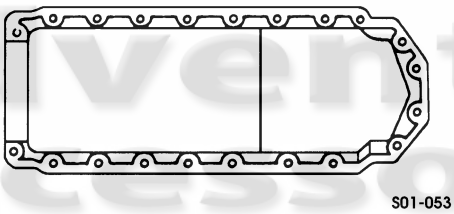

Figure 1-41: Sealant Diagram

ENGINE OIL COOLER SUPPLY AND RETURN LINES MAINTENANCE

Removal

1. Remove engine left splash shield (Section 10).
2. Remove engine access covers.
3. Disconnect supply and return line connectors from adapters. Drain engine oil (Figure 1-42).
4. Disconnect supply and return line connectors from oil cooler ports.
5. Remove locknut, two washers, and capscrew securing supply line, return line, and brake line clamps to frame bracket. Discard locknut.
6. Remove capscrew, lockwasher, and two clamps securing supply and return lines to engine mount bracket. Discard lockwasher.
7. Remove and discard tiedown strap securing supply and return lines.
8. Remove supply and return lines.

Adventure Accessories
HummerH1Parts.com 1-800-HUMMER-9

Cleaning and Inspection

NOTE: Clean all components, examine for wear or damage, and replace if necessary.

Inspect adapters for damaged threads or cracks (Figure 1-42).

Installation

1. Position supply and return lines in approximate mounting location (Figure 1-42).
2. Install supply line, return line, and brake line clamps on frame bracket with washer, capscrew, washer, and locknut. Tighten locknut to 6 lb-ft (8 N•m).
3. Connect supply and return line connectors to oil cooler ports and adapters.
4. Install supply and return lines and two clamps on engine mount bracket with lockwasher and capscrew.
5. Secure supply and return lines with tiedown strap.
6. Install engine left splash shield (Section 10).
7. Fill oil to proper level.
8. Start engine and check for leaks at engine oil cooler supply and return lines.
9. Install engine access covers.

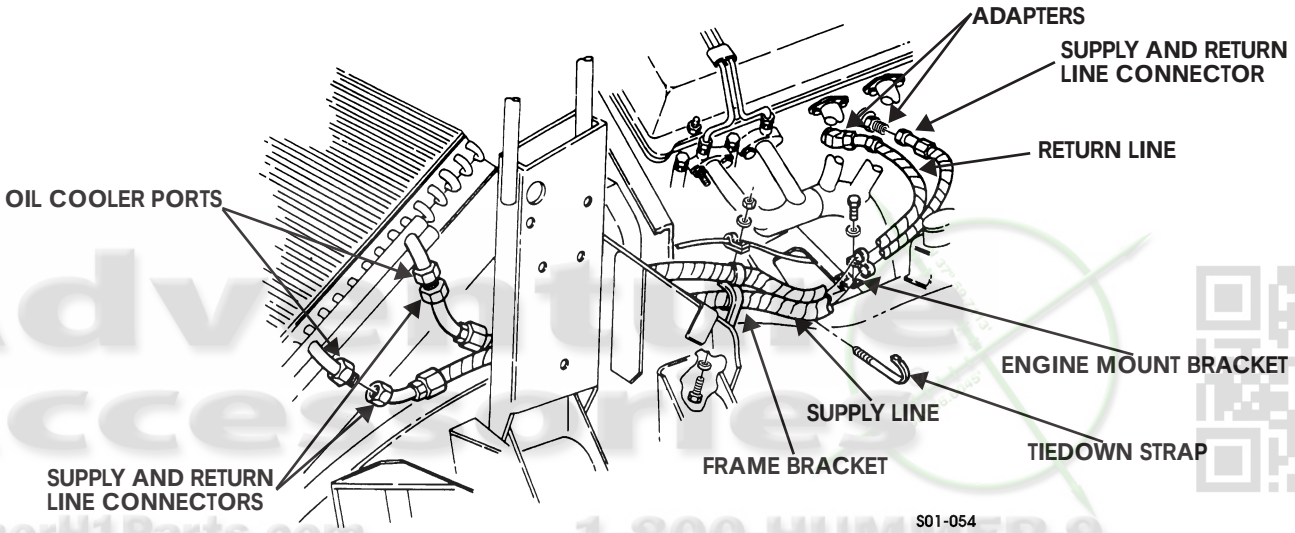

Figure 1-42: Engine Oil Cooler Supply and Return Lines

Adventure Accessories
HummerH1Parts.com 1-800-HUMMER-9

ENGINE/TRANSMISSION OIL COOLER ASSEMBLY REPLACEMENT

Removal

1. Remove engine left splash shield (Section 10).
2. Remove power steering cooler (Section 8).
3. Disconnect engine oil cooler supply and return lines from oil cooler ports. Drain oil (Figure 1-43).
4. Disconnect transmission oil cooler connector hoses from oil cooler ports.
5. Remove four socket-head screw and washer assemblies, washers, and oil cooler from radiator.

Installation

1. Install oil cooler on radiator with four washers and socket-head screw and washer assemblies (Figure 1-43).
2. Connect transmission oil cooler connector hoses to oil cooler ports.
3. Connect engine oil cooler supply and return lines to oil cooler ports.
4. Install power steering cooler (Section 8).
5. Replenish transmission and engine oils to proper levels.
6. Install engine left splash shield (Section 10).
7. Start engine and check for leaks.

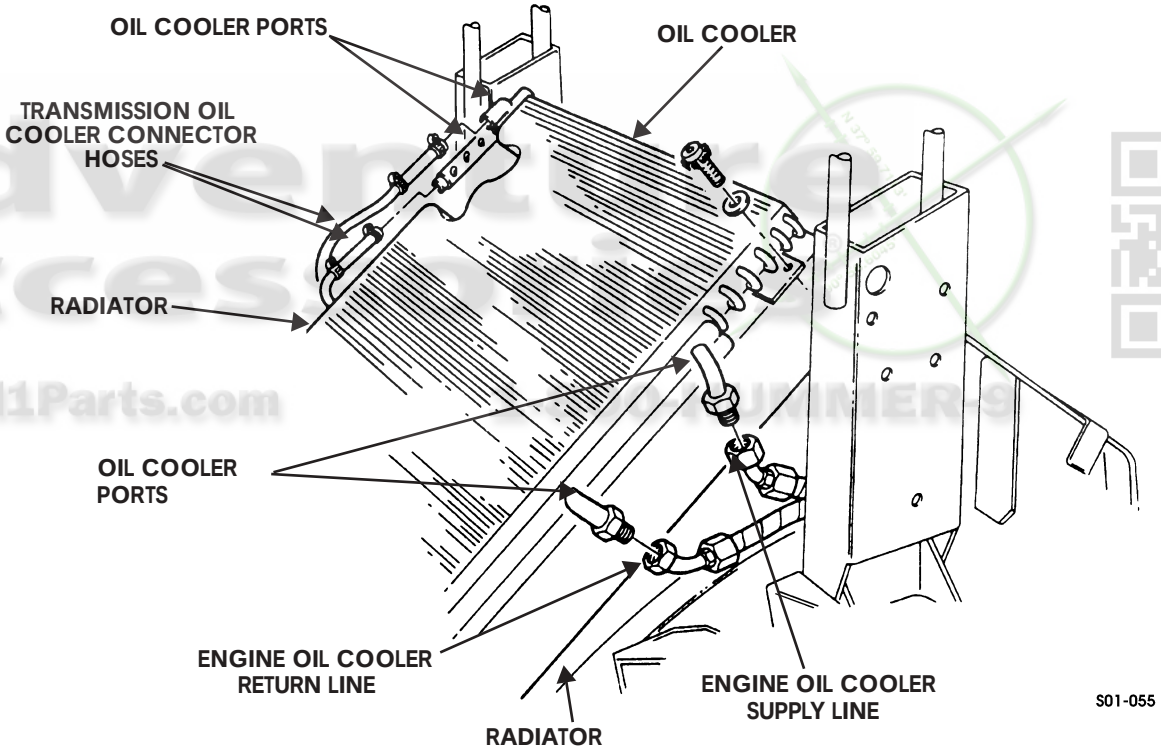

Figure 1-43: Engine/Transmission Oil Cooler Assembly

Adventure Accessories
HummerH1Parts.com

CRANKCASE DEPRESSION REGULATOR (CDR) VALVE AND HOSE MAINTENANCE

Removal

1. Remove engine access covers.
2. Remove CDR valve from rocker arm cover (Figure 1-44).
3. Remove hose from CDR valve and intake manifold adapter.

Cleaning and Inspection

NOTE: Clean all components, examine for wear or damage, and replace if necessary.

Inspect intake manifold adapter for breaks or cracks.

Installation

1. Install hose on intake manifold adapter and CDR valve (Figure 1-44).
2. Install CDR valve on rocker arm cover.
3. Install engine access covers.

Adventure Accessories
HummerH1Parts.com 1-800-HUMMER-9

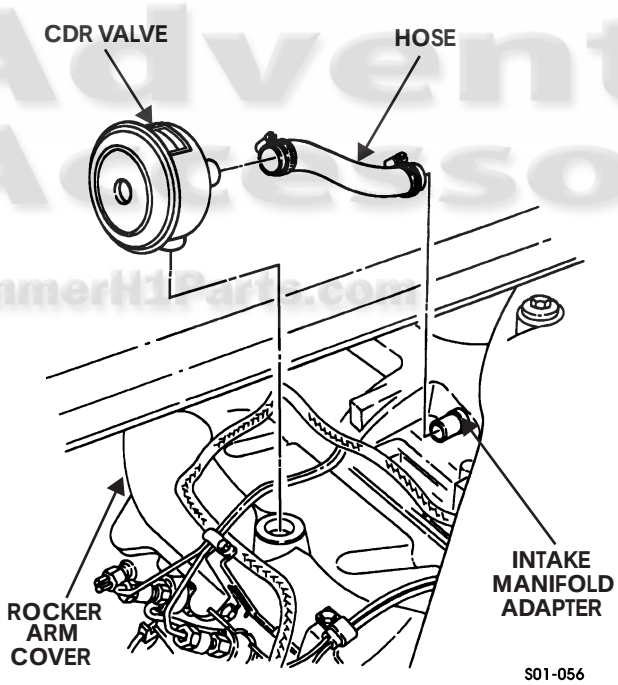

Figure 1-44: Crankcase Depression Regulator Valve

THIS PAGE INTENTIONALLY BLANK.