Section 8 Steering System

TABLE OF CONTENTS

STEERING SYSTEM DESCRIPTION

Power steering systems are designed to reduce steering effort by using hydraulic pressure to enhance the normal torque developed by the steering gearbox (Figure 8-1).

The hydro-boost converts hydraulic power (from the power steering pump) into mechanical power and diverts it to the master cylinder where it provides power assist during braking.

The power steering pump provides hydraulic oil pressure to operate the brake system's hydro-boost feature. The power steering cooler directs power steering fluid through a series of fins or baffles so outside air can dissipate excess heat before the fluid is recirculated through the steering system.

The standard power steering system on the HUMMER allows the driver to enjoy a more responsive steering system with less effort. The steering linkage is fairly typical with the exception of the steerable geared hubs. The geared hub enables a gear reduction of 1.92:1 at the wheel end. This allows for smaller and lighter components and provides an additional 4 inches of ground clearance.

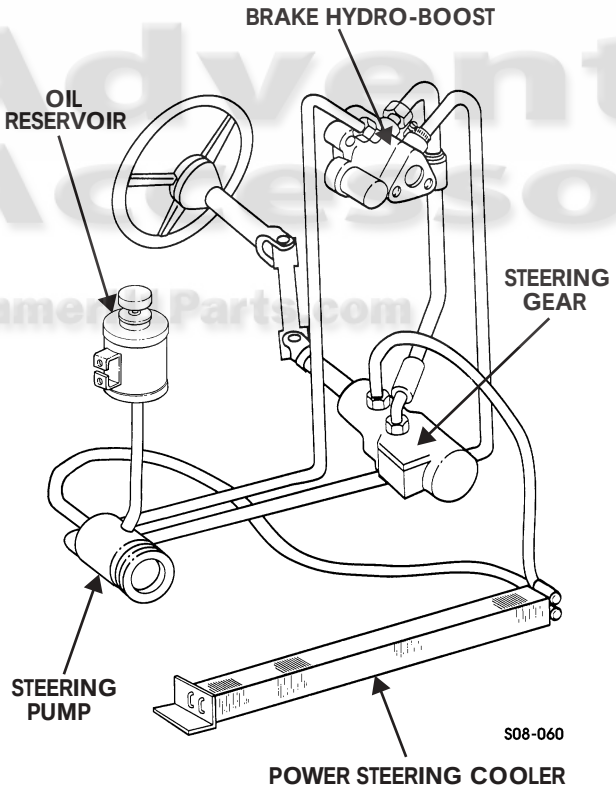

Figure 8-1: Steering System

DIAGNOSIS AND TROUBLESHOOTING

Hard Steering

1. Check for correct tire pressure. Adjust tire pressure.
2. Check power steering fluid level. Refer to lubrication chart (Section 1). If low, fill to proper level and check for leaks.
3. Check drivebelt for frays, cracks, or fluid contamination. Replace if damaged or contaminated.
4. Check serpentine belt tension.
5. Lubricate steering linkage, steering shaft, and check for damage. Refer to lubrication chart (Section 1). Replace any damaged components.
6. Check power steering system using power steering analyzer and analyzer adapter.
   a. Disconnect high pressure hose from hydro-boost leading to power steering pump and connect analyzer to hydro-boost and high pressure hose. Open valve on analyzer.
   b. Check fluid level in power steering pump and add if necessary.
   c. Connect tachometer for purpose of recording engine rpm in step h.
   d. Start engine and allow to idle. Check for leaks at connections.
   e. Record pump pressure and flow. Pressure should be 140-170 psi (965-1172 kPa) and flow should be 2.5-2.75 gpm (9.5-10.4 Lpm).
      (1) If pressure or flow is too low, check for restriction in pressure line from power steering pump.
      (2) If pressure is too high, check for restriction in pressure line from hydro-boost to steering gear. If no restrictions are found, replace power steering pump.
   f. Partially close valve on analyzer so pressure increases to 200 psi (1379 kPa) and record flow. Subtract this flow rate from flow rate obtained in step e. If there is more than 1 gpm (3.8 Lpm) difference in flow rates, replace power steering pump.

***CAUTION**: Do not leave valve fully closed for more than 5 seconds or pump damage will result.*

   g. Close and partially open valve on analyzer three times; record highest pressure reading each time. All three readings must be 1300 psi (8964 kPa) or above. If not, replace power steering pump.
   h. Open valve on analyzer and increase engine speed to 1500 rpm. Record flow. If flow varies more than 1 gpm (3.8 Lpm) from flow rate recorded in step f, replace power steering pump.

Excessive Play In Steering

1. Check for correct tire pressure. Adjust tire pressure.
2. Raise vehicle and support under lower control arms. Check for looseness in upper and lower ball joints by grasping tires at top and bottom outer edges and moving in and out.
   a. Replace upper ball joints if movement at top outer edge of tire is 3/8 in. (10 mm) or more.
   b. Replace lower ball joints if movement at bottom outer edge of tire is 1/2 in. (13 mm) or more.
3. Raise and support vehicle under frame. Secure steering wheel. Check for looseness in idler arm and steering arm by grasping tires at front and rear outer edges and moving in and out.
   a. Replace idler arm if vertical motion at center link exceeds 5/16 in. (8 mm), or if ball stud lateral motion exceeds 1/32 in. (0.8 mm).
   b. Replace steering arm if vertical motion at center link exceeds 1/8 in. (3 mm), or if ball stud lateral motion exceeds 1/32 in. (0.8 mm).

NOTE: Worn, missing, or damaged control arm bushings affect braking and steering, and can cause noise in suspension during operation.

4. Check for worn, missing, or damaged rubber bushings in control arms. Replace both bushings in control arm if one is defective. Recheck wheel alignment after bushing replacement.

***CAUTION**: Do not loosen slotted nut to install cotter pin. Doing this may cause damage to equipment.*

5. Check tie rod or radius rod to geared hub steering arm mounting. Remove and discard cotter pin. Back off ball stud nut and retorque to 80 lb-ft (108 N•m). If cotter pin hole is not aligned with nut slots, advance nut until cotter pin can be installed. Install cotter pin. Check for free play. If free play is evident, replace worn part.
6. Check front wheel alignment.

Increase In Steering Effort When Turning From Lock-to-Lock Conditions

1. Check power steering fluid level. If low, fill to proper level and check for leaks (Section 1).
2. Purge air from power steering system.
3. Check serpentine belt tension.
4. Check steering gear mounting capscrews for looseness. Torque capscrews to 60 lb-ft (81 N•m).
5. Check pump pressure and flow. Refer to *Hard Steering*, step 6.
6. Lubricate steering linkage, steering shaft, and ball joints.

STEERING ARM REPLACEMENT

NOTE: Ensure front wheels are in straight-ahead position while steering arm is removed and installed.

Removal

1. Raise and support front of vehicle.
2. Remove nut, lockwasher, and steering arm from steering gear shaft. Discard lockwasher (Figure 8-2).
3. Remove cotter pin and slotted nut from steering arm. Discard cotter pin.
4. Using puller, remove steering arm from center link.

Installation

1. Install steering arm on steering gear shaft with lockwasher and nut (Figure 8-2).

2. Install steering arm on center link with slotted nut. Tighten slotted nut to 80 lb-ft (108 N•m).
3. Tighten nut on steering gear shaft to 185 lb-ft (251 N•m).

***CAUTION**: Do not loosen slotted nut to install cotter pin. Doing this may result in damage to equipment.*

4. Install cotter pin in slotted nut.
5. Lubricate steering arm.
6. Remove supports and lower front of vehicle.
7. Inspect wheel alignment.

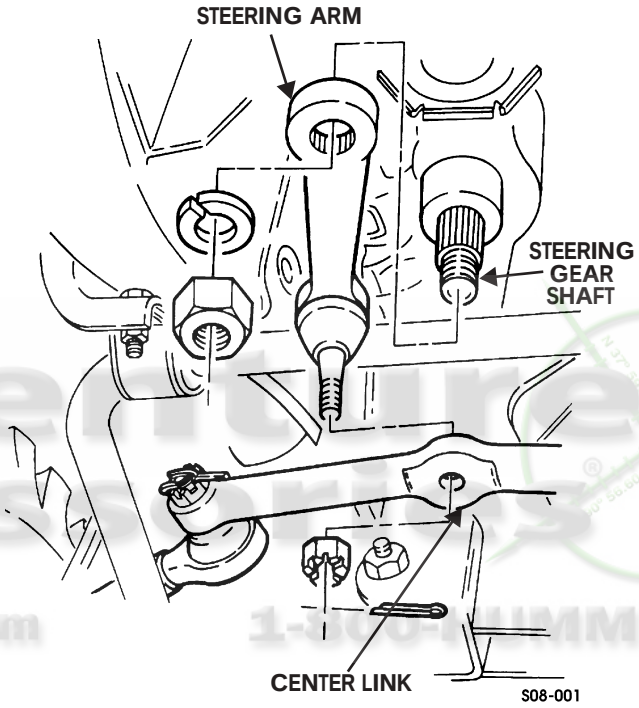

Figure 8-2: Steering Arm

CENTER LINK REPLACEMENT

Removal

1. Raise and support front of vehicle.
2. Remove cotter pin and slotted nut securing idler arm to center link. Discard cotter pin (Figure 8-3).
3. Remove cotter pin and slotted nut securing steering arm to center link. Discard cotter pin.
4. Remove two cotter pins and slotted nuts securing two tie rods to center link. Discard cotter pins.
5. Using puller, remove center link from two tie rods, idler arm, and steering arm.

Installation

***CAUTION**: Do not loosen slotted nut to install cotter pin. Doing this may result in damage to equipment.*

1. Install center link on steering arm and idler arm with two slotted nuts. Tighten slotted nuts to 80 lb-ft (108 N•m) (Figure 8-3).
2. Install two cotter pins in slotted nuts.
3. Install two tie rods to center link with two slotted nuts. Tighten slotted nuts to 70 lb-ft (95 N•m).
4. Install two cotter pins in slotted nuts.
5. Remove supports and lower front of vehicle.
6. Inspect wheel alignment.

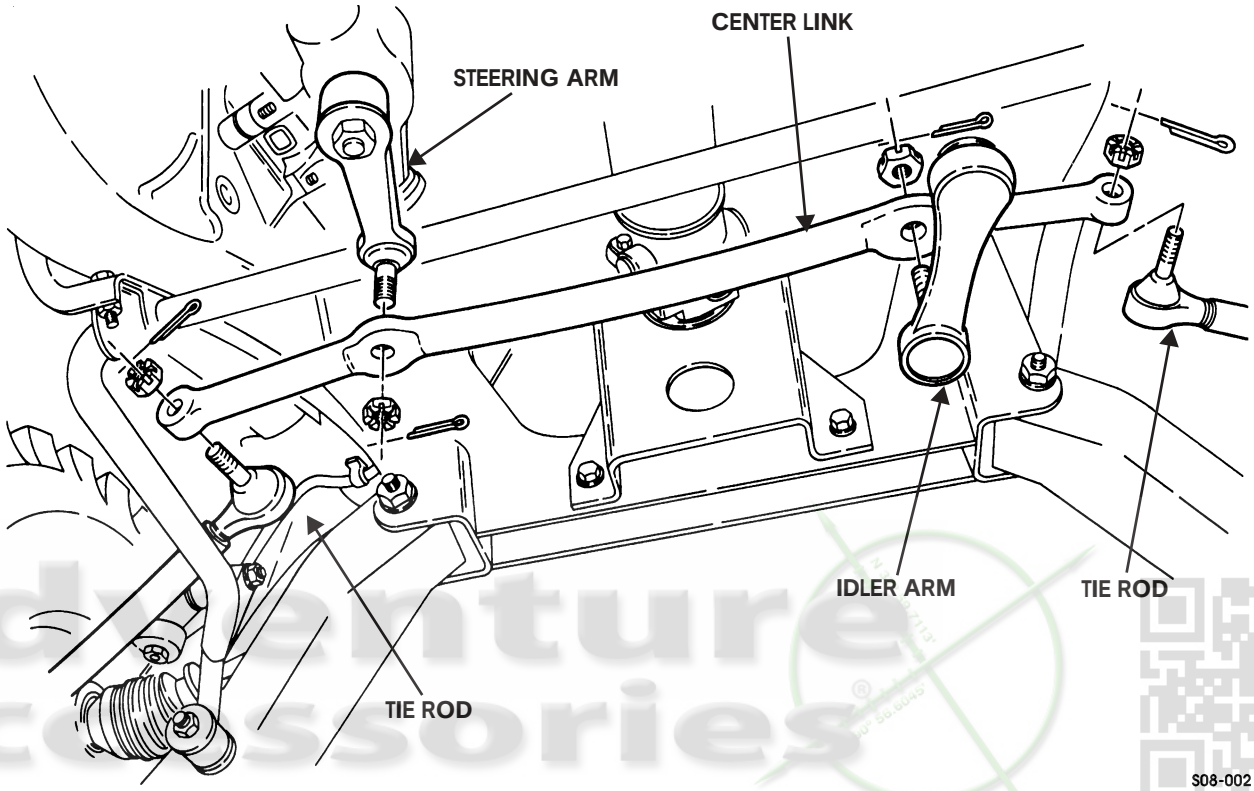

Figure 8-3: Center Link

TIE ROD END REPLACEMENT

Removal

1. Raise and support front of vehicle.
2. Remove cotter pin, slotted nut, and washer securing tie rod end to geared hub. Discard cotter pin (Figure 8-4).
3. Using puller, remove tie rod end from geared hub.

NOTE: Note number of threads exposed on each tie rod end for installation. Approximately the same number of threads should be exposed on each tie rod end.

4. Loosen locknut on clamp securing tie rod end to adjusting sleeve and remove tie rod end (Figure 8-4).

Installation

***CAUTION**: Ensure clamp faces halfshaft or damage to equipment may result.*

1. Install tie rod end into adjusting sleeve and tighten clamp (Figure 8-4).

***CAUTION:** Do not loosen slotted nut to install cotter pin. Doing this may result in damage to equipment.*

2. Install tie rod end on geared hub with washer and slotted nut. Tighten slotted nut to 70 lb-ft (95 N•m) (Figure 8-4).
3. Install cotter pin in slotted nut.
4. Lubricate tie rod end.
5. Remove supports and lower front of vehicle.

6. Align toe-in (Section 6).

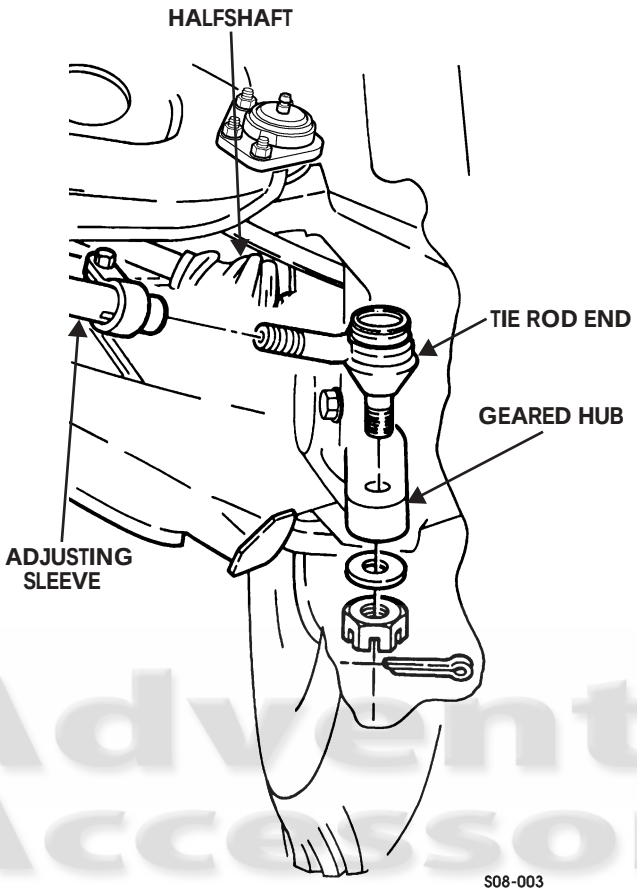

Figure 8-4: Tie Rod End

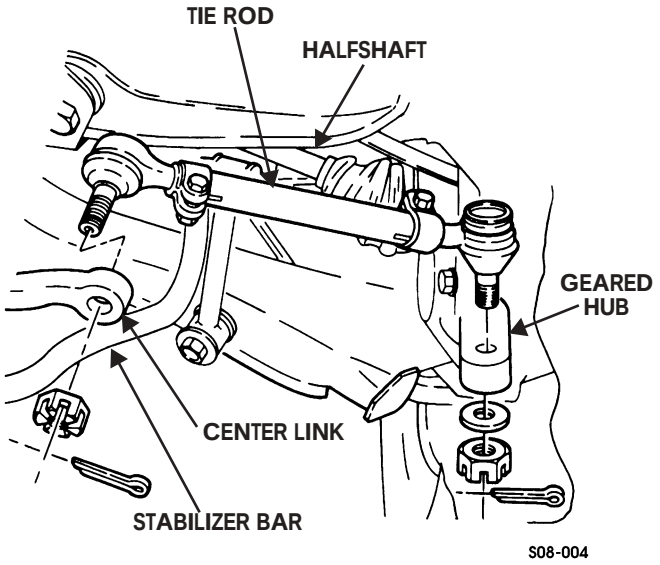

Figure 8-5: Tie Rod

TIE ROD MAINTENANCE

Removal

1. Raise and support front of vehicle.
2. Remove cotter pin and slotted nut securing tie rod to center link. Discard cotter pin (Figure 8-5).
3. Remove cotter pin, slotted nut, and washer securing tie rod to geared hub. Discard cotter pin.
4. Using puller, remove tie rod from center link and geared hub.

Disassembly

1. Loosen two locknuts and clamps securing tie rod ends to adjusting sleeve (Figure 8-6).

NOTE: Note number of threads exposed on each tie rod end for installation. Approximately the same number of threads should be exposed on each tie rod end.

2. Remove two tie rod ends from adjusting sleeve.
3. Remove two locknuts, capscrews, and clamps from adjusting sleeve. Discard locknuts.

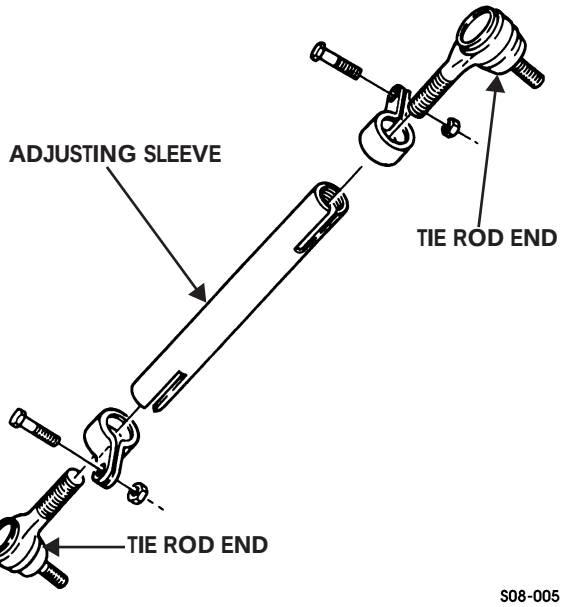

Figure 8-6: Adjusting Sleeve

Assembly

1. Install two clamps, capscrews, and locknuts on adjusting sleeve (Figure 8-6).
2. Install two tie rod ends into adjusting sleeve, turning tie rod ends equally but in opposite directions.

Installation

1. Install tie rod on center link with slotted nut. Tighten slotted nut to 70 lb-ft (95 N•m) (Figure 8-5).

CAUTION: *Do not loosen slotted nut to install cotter pin. Doing this may result in damage to equipment.*

2. Install tie rod on geared hub with washer and slotted nut. Tighten slotted nut to 70 lb-ft (95 N•m).
3. Install cotter pins in slotted nuts.

CAUTION: *Ensure the outboard clamp faces the half-shaft and the inboard clamp faces away from the stabilizer bar (front only) or damage to equipment may result.*

4. Tighten two locknuts on clamps.
5. Lubricate tie rod end.
6. Remove supports and lower front of vehicle.
7. Align toe-in (Section 6).

IDLER ARM REPLACEMENT

Removal

1. Raise and support front of vehicle.
2. Remove cotter pin and slotted nut securing idler arm to center link. Discard cotter pin (Figure 8-7).
3. Using puller, disconnect center link from idler arm.
4. Remove two locknuts, washers, capscrews, washers, and idler arm from frame. Discard locknuts.

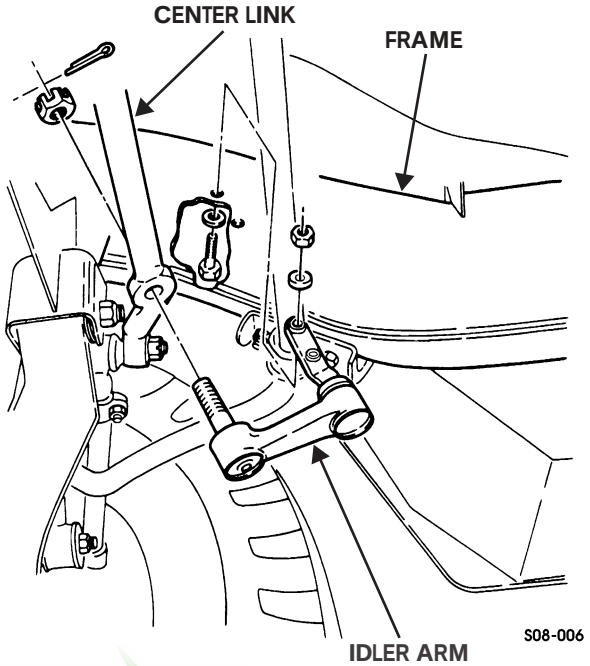

Figure 8-7: Idler Arm

Installation

1. Install idler arm on frame with two washers, capscrews, washers, and locknuts. Tighten locknuts to 60 lb-ft (81 N•m) (Figure 8-7).
2. Install idler arm on center link with slotted nut. Tighten slotted nut to 80 lb-ft (108 N•m).

CAUTION: *Do not loosen slotted nut to install cotter pin. Doing this may result in damage to equipment.*

3. Install cotter pin in slotted nut.
4. Lubricate idler arm.
5. Remove supports and lower front of vehicle.
6. Inspect wheel alignment.

STEERING WHEEL REPLACEMENT

Removal

1. Remove front cover from steering wheel and rear cover (Figure 8-8).
2. Remove nut securing steering wheel and rear cover to shaft. Discard nut.
3. Using puller, remove steering wheel from shaft.
4. Remove rear cover from shaft.

Installation

NOTE: Ensure front wheels are in a straight ahead position.

1. Install rear cover on shaft (Figure 8-8).
2. Align splines on steering wheel with splines on shaft.
3. Install steering wheel on shaft with nut. Tighten nut to 35 lb-ft (47 N•m).
4. Peen nut.
5. Install front cover on rear cover and steering wheel.
6. Operate vehicle and verify steering wheel alignment is properly timed.

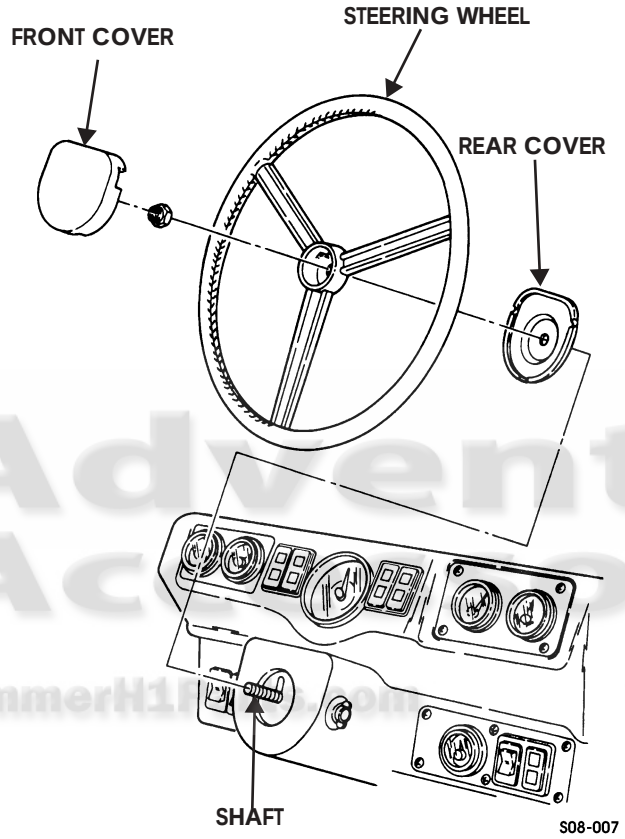

Figure 8-8: Steering Wheel

STEERING COLUMN REPLACEMENT

Removal

NOTE: When performing step 1, turn steering column to gain access to intermediate shaft mounting hardware.

1. Remove steering wheel.
2. Remove close-out panel.
3. Remove locknut, washer, capscrew, and washer securing intermediate shaft to steering column (Figure 8-9).
4. Remove locknut, lockwasher, three washers, and bolt securing steering column to mounting bracket. Discard lockwasher and locknut.
5. Remove two locknuts, washer, shoulder bolts, and steering column from mounting bracket. Discard locknut.
6. Remove five screws and two covers from steering column.
7. Disconnect two multi-switch connectors from multi-switch.
8. Disconnect two ignition switch connectors from ignition switch.
9. Remove multi-switch and ignition switch from steering column.

Installation

1. Install ignition switch and multi-switch on steering column (Figure 8-9).
2. Connect two ignition switch connectors to ignition switch.
3. Connect two multi-switch connectors to multi-switch.
4. Install cover on steering column with five screws.
5. Install steering column on mounting bracket with two shoulder bolts, washers, and locknuts. Finger tighten locknut.
6. Install steering column on mounting bracket with bolt, three washers, lockwasher, and locknut. Finger tighten locknuts.
7. Install intermediate shaft on steering column with washer, capscrew, washer, and locknut. Tighten locknut to 60 lb-ft (81 N•m).
8. Position steering column in upright position and tighten locknut to 31 lb-ft (42 N•m).
9. Tighten shoulder bolt locknuts to 10 lb-ft (14 N•m).
10. Install steering wheel.
11. Install close-out panel.
12. Operate vehicle to verify steering wheel alignment is properly timed.

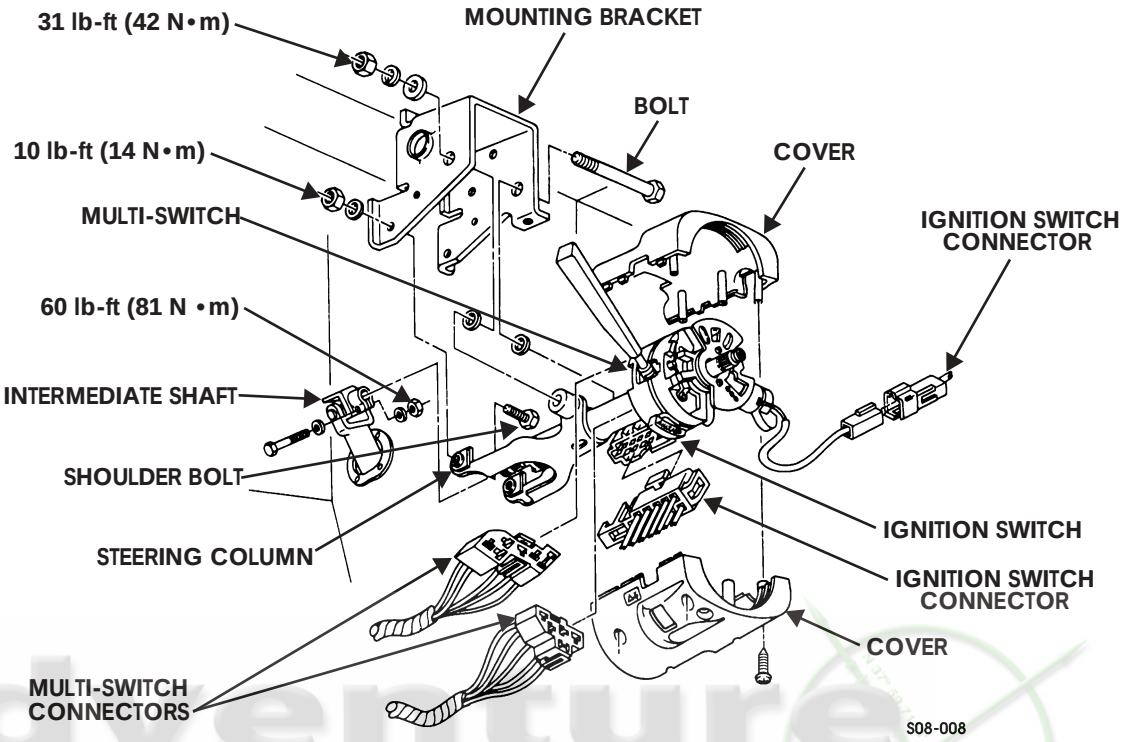

Figure 8-9: Steering Column

STEERING COLUMN MULTI-SWITCH REPLACEMENT

NOTE: This procedure covers the directional signal, horn, high beam, and hazard light switches.

Removal

1. Disconnect battery ground cable.
2. Remove steering column.
3. Remove two screws and multi-switch from steering column (Figure 8-10).
4. Remove control handle from multi-switch.

Installation

1. Install control handle on multi-switch (Figure 8-10).
2. Install multi-switch on steering column with two screws.
3. Install steering column.
4. Connect battery ground cable.

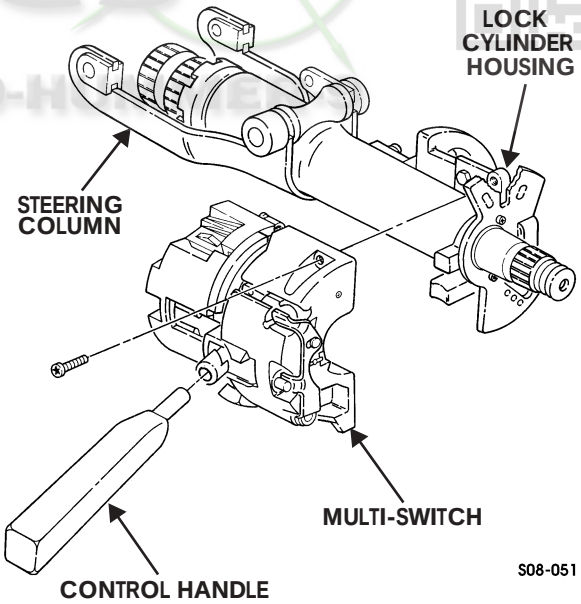

Figure 8-10: Steering Column Multi-Switch

LOCK AND SWITCH HOUSING ASSEMBLY REPLACEMENT

Removal

1. Disconnect battery ground cable.
2. Remove steering column.
3. Remove multi-switch.
4. Remove screw and interlock cable from ignition switch (Figure 8-11).
5. Remove two capscrews and lock and switch housing assembly from steering column.

Installation

1. Apply thread-locking compound to capscrew threads and install lock and switch housing assembly on steering column with two capscrews (Figure 8-11).
2. Install interlock cable on ignition switch with screw.
3. Install multi-switch.
4. Install steering column.
5. Connect battery ground cable.
6. Ensure ignition switch operates properly.

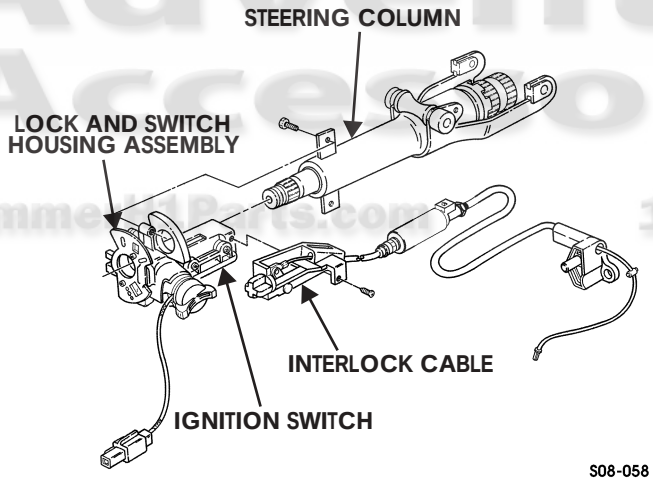

Figure 8-11: Lock and Switch Housing Assembly

STEERING COLUMN REPAIR

Lock And Switch Housing Assembly

Disassembly

NOTE: The key must stay in the ignition switch at all times.

1. Remove the lock cylinder and key assembly from the lock cylinder housing (Figure 8-12).
2. Remove two screws securing the upper retainer plate to the lock cylinder housing. Remove the retainer plate, the upper bearing assembly and upper bearing sleeve from the lock cylinder housing.
3. Remove two screws and the multi-switch assembly from the lock cylinder housing (Figure 8-10).
4. Remove two screws securing the ignition switch assembly to the lock cylinder housing. Remove the ignition switch assembly (Figure 8-12).
5. Remove six stakes from the tube and bracket assembly (Figure 8-13).
6. Remove two screws and remove the lock cylinder housing from the tube and bracket assembly.
7. Remove the retainer ring, shaft, and bearing from the tube and bracket assembly.

Assembly

1. Install the shaft, bearing, and retainer ring into tube and bracket assembly (Figure 8-13).
2. Install the lock cylinder housing on the tube and bracket assembly with two screws. Tighten screws to 6-7 lb-ft (8.1-9.4 N•m).
3. Stake bearing securely in six (6) places (Figure 8-13).
4. Install the ignition switch assembly on the lock cylinder housing with two screws. Tighten screws to 35-40 lb-in. (3.9-4.5 N•m) (Figure 8-12).
5. Install the multi-switch assembly on the lock cylinder housing with two screws. Tighten screws to 35-40 lb-in. (3.9-4.5 N•m) (Figure 8-10).
6. Install the upper bearing assembly and upper bearing sleeve in the lock cylinder housing (Figure 8-12).
7. Install the retainer plate on the lock cylinder housing with two screws. Tighten screws to 35-40 lb-in. (3.9-4.5 N•m).
8. Install the lock cylinder and key assembly in the lock cylinder housing assembly.
9. Ensure ignition switch operates properly.

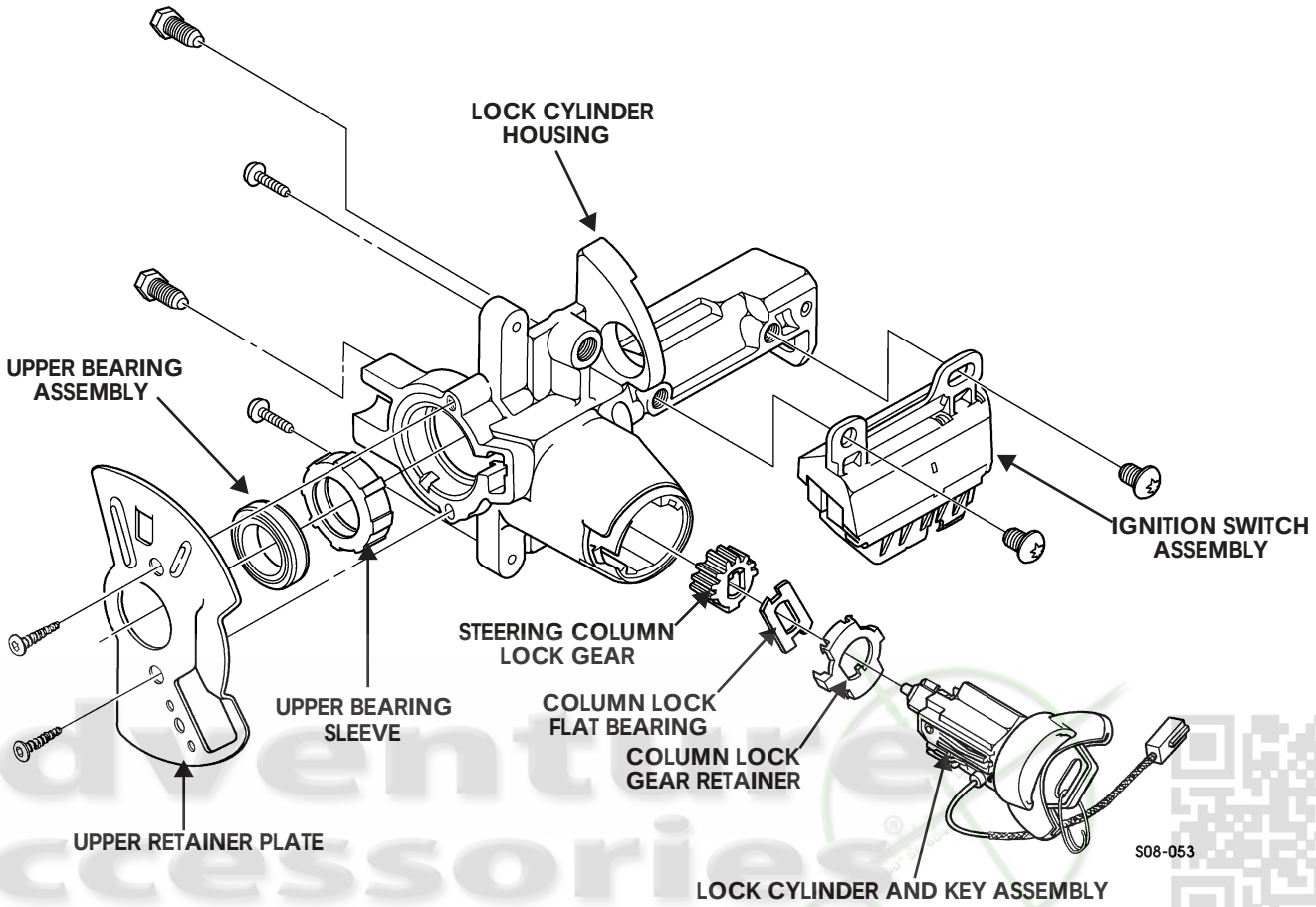

Figure 8-12: Lock And Switch Housing Assembly

Steering Column and Shaft

Disassembly

1. Remove two screws and the multi-switch assembly from the lock and switch housing (Figure 8-10).
2. Remove two screws and lock and switch housing assembly from steering column (Figure 8-11).
3. Remove six stakes from the tube and bracket assembly (Figure 8-13).
4. Remove the shaft, retainer ring, and bearing from tube and bracket assembly.
5. Remove retainer ring and bearing from the shaft.

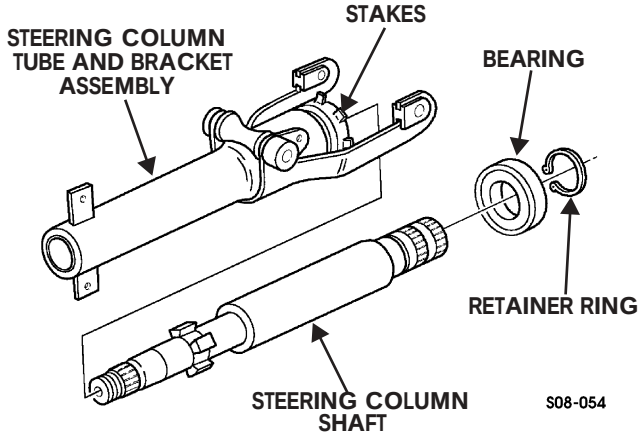

Figure 8-13: Steering Column and Shaft

Assembly

1. Install retainer ring and bearing onto shaft (Figure 8-13).
2. Install the shaft into the tube and bracket assembly.
3. Install six stakes into the tube and bracket assembly.
4. Install lock and switch housing assembly on steering column with two screws (Figure 8-11).

5. Connect the multi-switch assembly to the lock and switch housing with two screws (Figure 8-10).

STEERING WHEEL HUB AND STEERING COLUMN SHROUD REPLACEMENT

Removal

1. Remove three locking screws, steering wheel hub trim and adapter from steering wheel.
2. Remove five tapping screws and upper and lower steering column shrouds from steering column.

Installation

1. Install upper and lower steering column shrouds on steering column with five tapping screws.
2. Install adapter and steering wheel hub trim with three tapping screws.

IGNITION SWITCH LOCK CYLINDER REPLACEMENT

Removal

1. Disconnect battery ground cable.
2. Remove close-out panel.
3. Remove five screws and lower steering column cover (Figure 8-14).
4. Disconnect lock cylinder connector from ignition switch connector.
5. Turn ignition switch to RUN position.
6. Depress lock cylinder detent pin through detent pin hole and remove lock cylinder from steering column.

Installation

1. Insert lock cylinder into steering column (Figure 8-14).
2. Turn ignition switch to LOCK position.
3. Connect lock cylinder connector to ignition switch connector.
4. Install lower steering column cover on steering column with five screws.
5. Install close-out panel.
6. Connect battery ground cable.
7. Ensure ignition switch lock cylinder operates properly.

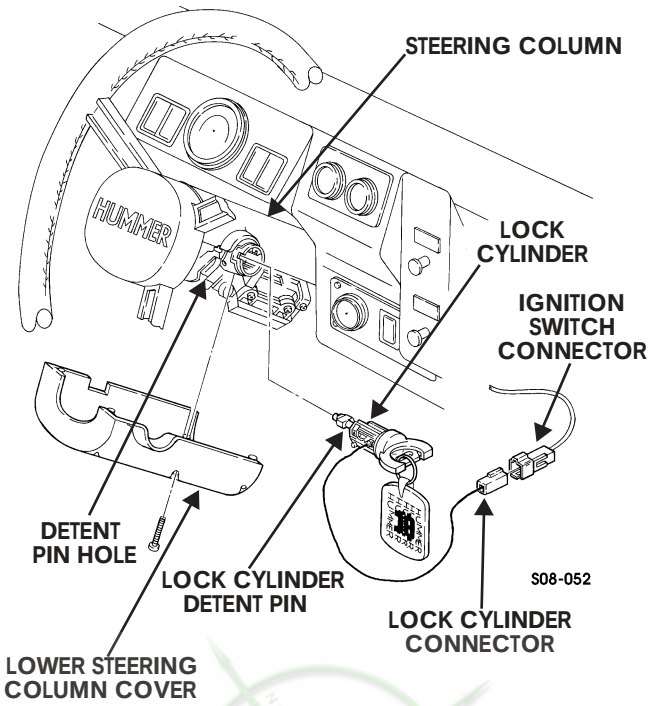

Figure 8-14: Ignition Switch Lock Cylinder

IGNITION INTERLOCK CABLE REPLACEMENT

Removal

1. Remove five screws and lower cover from steering column (Figure 8-15).
2. Loosen two locknuts securing steering column to mounting bracket.
3. Remove locknut, lockwasher, three washers, and bolt securing steering column to mounting bracket. Discard lockwasher and locknut.
4. Lower steering column and remove upper cover.
5. Remove screw and interlock cable from ignition switch (Figure 8-16).

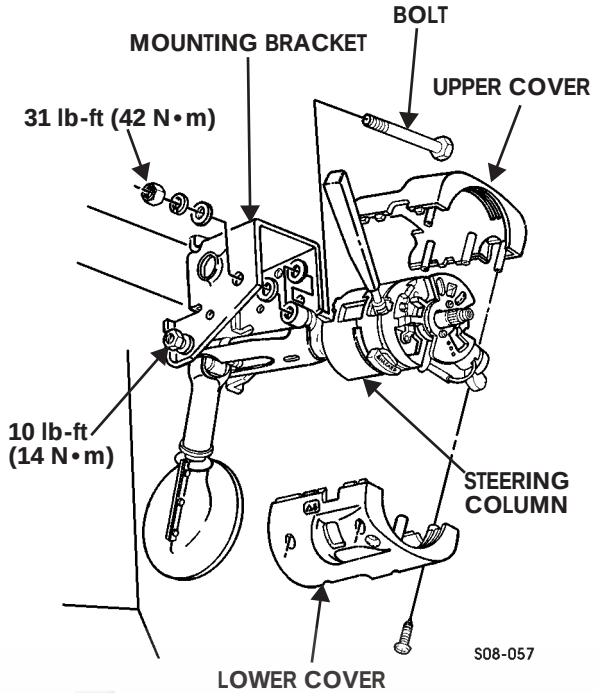

Figure 8-15: Steering Column Covers

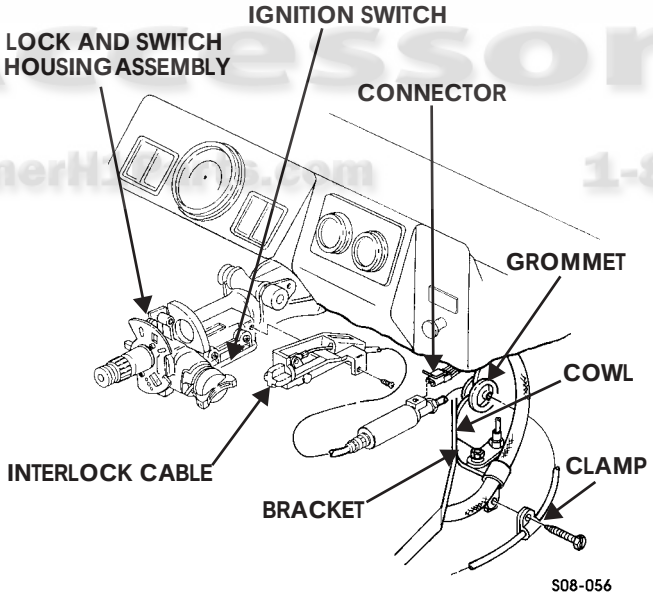

Figure 8-16: Interlock Cable/Ignition Switch

6. Disconnect connector from interlock cable.
7. Raise and secure hood.
8. Remove screw securing clamp and interlock cable to bracket. Remove clamp from interlock cable.
9. Remove close-out panel (Section 10).
10. Remove shifter (Section 5).
11. Remove nut and screw securing interlock cable to shifter (Figure 8-17).
12. Remove interlock cable and grommet from vehicle.

Installation

1. Install interlock cable on shifter with screw and nut. Tighten nut to 8 lb-ft (11 N•m) (Figure 8-17).

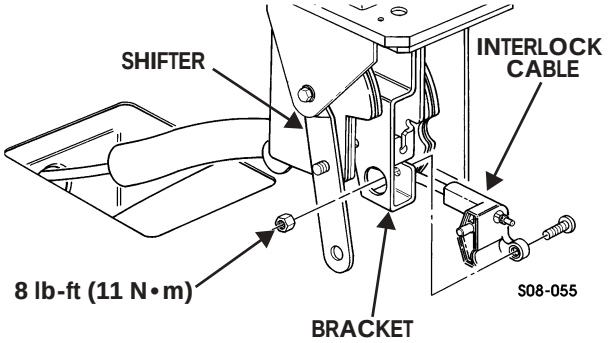

Figure 8-17: Interlock Cable and Shifter

2. Route interlock cable through bracket and install shifter (Section 5).
3. Secure interlock cable to bracket with clamp and screw (Figure 8-16).
4. Route interlock cable through cowl and secure with grommet.
5. Lower and secure hood.
6. Secure interlock cable to ignition switch with screw.
7. Connect connector to interlock cable.
8. Position upper steering column cover on steering column (Figure 8-15).
9. Raise steering column and secure steering column on mounting bracket with bolt, three washers, lockwasher, and locknuts. Tighten locknuts to 31 lb-ft. (42 N•m).
10. Replace two locknuts securing steering column to mounting bracket. Tighten locknuts to 10 lb-ft (14 N•m).
11. Secure lower steering column cover to upper cover with five screws.
12. Install close-out panel (Section 10).

Test

1. With transmission lever in P, turn ignition key to run.
2. Activate brake switch and move transmission lever to N.
3. Without turning ignition key off, move transmission shift lever to P.
4. Turn ignition key off. To pass test, it should not be possible to move transmission lever out of P unless an extremely high effort is applied.
5. Turn ignition key on. To pass test, it should not be possible to move transmission lever out of P unless an extremely high effort is applied.
6. Activate brake switch. To pass test, transmission lever should be moved from P to N with normal shift effort.

7. Turn ignition key off. To pass test, it should not be possible to remove ignition key without a high effort being applied to ignition key while transmission lever is in N.
8. Move transmission lever to P. To pass test, it must be possible to remove ignition key with normal effort applied to ignition key.

STEERING GEAR REPLACEMENT

Removal

NOTE: Ensure front wheels are in the straight-ahead position. Have drainage container ready to catch fluid.

1. Disconnect two power steering lines from steering gear (Figure 8-18).
2. Turn steering wheel left and right several times to bleed off power steering fluid.
3. Remove locknut, washer, capscrew, and washer and disconnect intermediate shaft and yoke from steering gear. Discard locknut.
4. Remove nut and lockwasher from steering arm. Discard lockwasher (Figure 8-19).
5. Remove steering arm from shaft.
6. Remove three capscrews, lockwashers, washers, and steering gear from frame. Discard lockwashers (Figure 8-18).

Installation

1. Align steering gear with mounting holes in frame and secure with three washers, lockwashers, and capscrews. Tighten capscrews to 54-66 lb-ft (73-89 N•m) (Figure 8-18).
2. Align hole in yoke with notch on steering gear splines and slide intermediate shaft on steering gear splines.
3. Install intermediate shaft and yoke on steering gear splines with washer, capscrew, washer, and locknut. Tighten locknut to 60 lb-ft (81 N•m).
4. Connect two power steering lines to steering gear.

NOTE: Ensure front wheels are in the straight ahead position.

5. Install steering arm on shaft with lockwasher and nut. Tighten nut to 167-203 lb-ft (227-275 N•m) (Figure 8-19).
6. Fill power steering reservoir.
7. Purge air from power steering system.
8. Inspect wheel alignment.

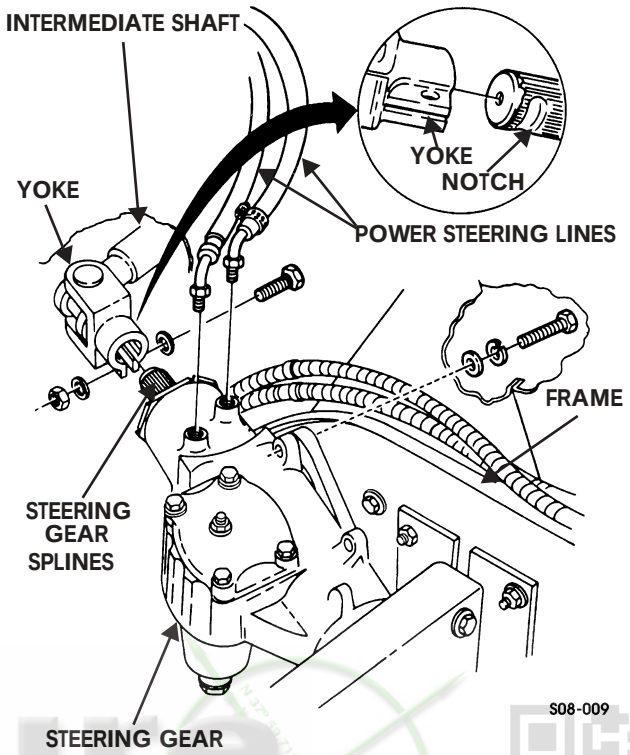

Figure 8-18: Steering Gear

INTERMEDIATE STEERING SHAFT REPLACEMENT

NOTE: Ensure front wheels are in straight-ahead position while removing and installing intermediate steering shaft.

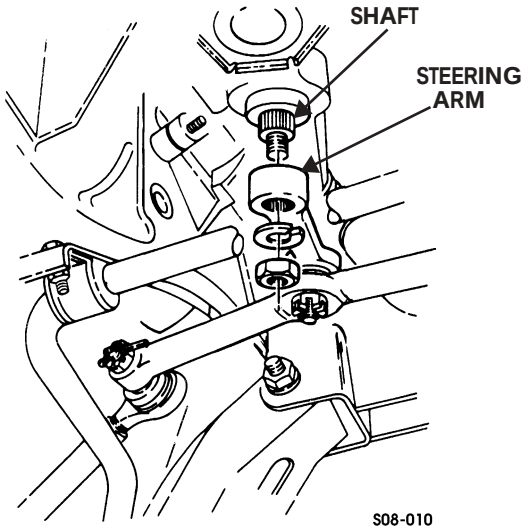

Figure 8-19: Steering Gear Shaft

Removal

1. Remove close-out panel.
2. Remove three nuts, six washers, and three screws from dust boot (Figure 8-20).
3. Remove locknut, washer, capscrew, and washer securing intermediate steering shaft to steering gear. Discard locknut.
4. Remove locknut, washer, capscrew, washer, and intermediate steering shaft from steering column. Discard locknut.

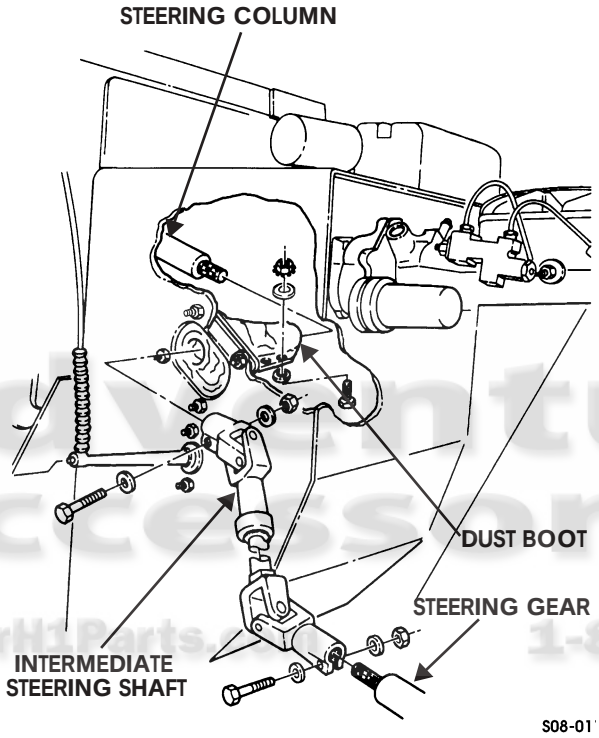

Figure 8-20: Intermediate Steering Shaft

Installation

1. Install intermediate steering shaft on steering gear with washer, capscrew, washer, and locknut. Tighten locknut to 60 lb-ft (81 N•m) (Figure 8-20).
2. Install intermediate steering shaft on steering column with washer, capscrew, washer, and locknut. Tighten locknut to 60 lb-ft (81 N•m).
3. Install three screws, six washers, and three nuts on dust boot.
4. Lubricate steering shaft.
5. Install close-out panel.

INTERMEDIATE STEERING SHAFT DUST BOOT REPLACEMENT

Removal

1. Remove close-out panel.
2. Remove three nuts, six washers, and three screws from dust boot (Figure 8-21).
3. Remove locknut, washer, capscrew, washer, and intermediate steering shaft from steering column. Discard locknut.
4. Remove four locknuts, eight washers, four screws, spacer, and dust boot from cowl panel and intermediate steering shaft.

Installation

1. Install spacer and dust boot on cowl panel with four screws, eight washers, and four locknuts. Tighten locknuts to 60 lb-ft (81 N•m) (Figure 8-21).
2. Install intermediate steering shaft through dust boot and connect to steering column. Secure steering shaft to steering column with washer, capscrew, washer, and locknut. Tighten locknut to 60 lb-ft (81 N•m).
3. Install three screws, six washers, and three nuts on dust boot.
4. Install close-out panel.

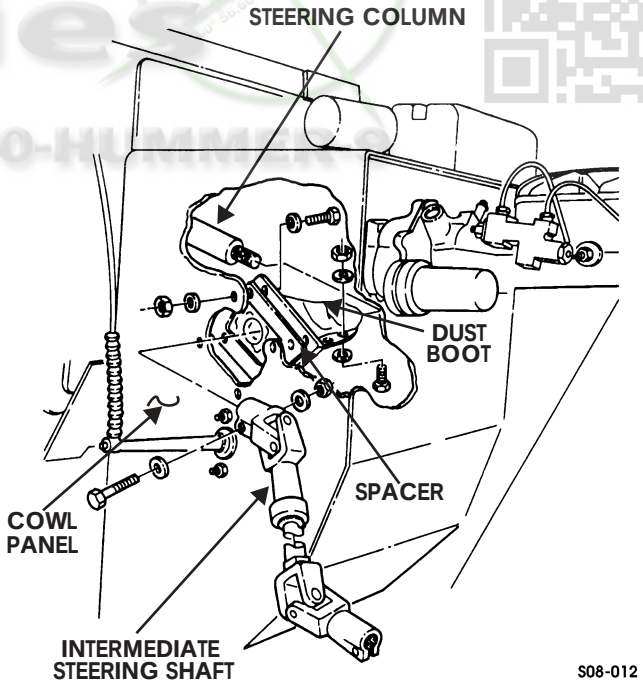

Figure 8-21: Intermediate Steering Shaft Dust Boot

POWER STEERING PUMP, PULLEY, AND BRACKET MAINTENANCE

Removal

NOTE: Have drainage container ready to catch fluid.

1. Disconnect two return lines and high pressure line from power steering pump. Remove O-ring seal from high pressure line. Discard O-ring seal (Figure 8-22).
2. Disconnect reservoir hose from power steering pump.
3. Loosen adjusting capscrew on front of power steering bracket (Figure 8-23).
4. Loosen adjusting capscrew on rear of power steering bracket.
5. Loosen engine mounting capscrew and push power steering bracket toward engine. Remove serpentine belt from power steering pump pulley.
6. Remove capscrew and lockwasher securing power steering bracket to bracket. Discard lockwasher.
7. Remove adjusting capscrew, lockwasher, and washer securing power steering bracket to bracket. Discard lockwasher.
8. Remove adjusting capscrew, lockwasher, and washer securing power steering bracket to power steering support bracket. Discard lockwasher.
9. Remove power steering pump, pulley, and power steering bracket from support bracket.
10. Remove two screws and bracket from engine.
11. Inspect support bracket for breaks or cracks. Perform step 12 if support bracket is defective.
12. Remove two nuts and support bracket from studs.

Disassembly

1. Remove screw, washer, and pulley from power steering pump (Figure 8-23).
2. Remove four capscrews and power steering pump from power steering bracket.

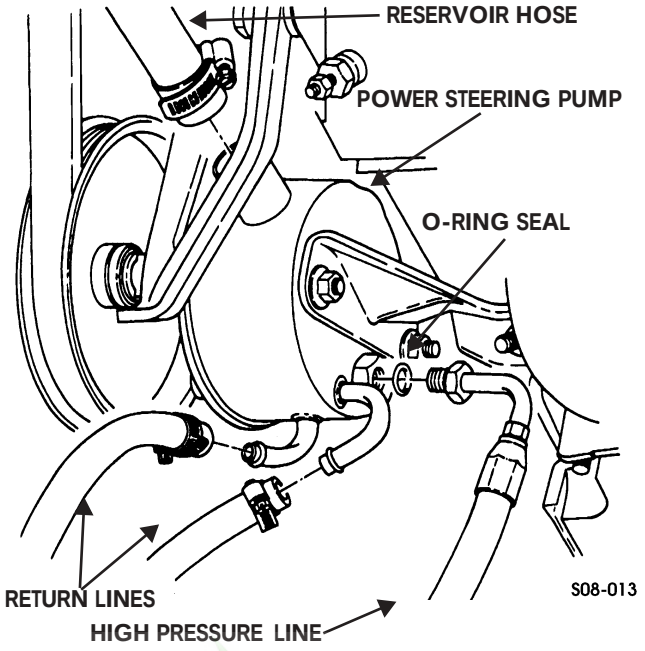

Figure 8-22: Power Steering Pump

Assembly

1. Apply sealing compound adhesive to threads of capscrews.
2. Install power steering pump on power steering bracket with four capscrews. Tighten capscrews to 40 lb-ft (54 N•m) (Figure 8-23).
3. Use a pulley installer to install pulley on power steering pump.
4. Install pulley to power steering pump with washer and capscrew. Tighten capscrew to 37 lb-ft (50 N•m).

Installation

NOTE: Perform step 1 if support bracket was removed.

1. Apply sealing compound to studs and install support bracket to studs with two nuts. Tighten nuts to 45 lb-ft (61 N•m) (Figure 8-23).
2. Install bracket on engine with two screws.
3. Install power steering pump, pulley, and power steering bracket on bracket with washer, lockwasher, and adjusting capscrew.
4. Install power steering bracket on support bracket with washer, lockwasher, and adjusting capscrew.
5. Install serpentine belt on pulley.
6. Pull power steering bracket away from engine and install power steering bracket to bracket with lockwasher and engine mounting capscrew.
7. Connect two return lines to power steering pump (Figure 8-22).

8. Install O-ring seal on high pressure line and connect high pressure line to power steering pump.
9. Install reservoir hose on power steering pump.
10. Purge air from power steering system.
11. Start engine and check for leaks.

PURGING AIR FROM POWER STEERING SYSTEM

Air will enter the system whenever the fluid lines are disconnected, or components removed for service. This air must be purged before returning the vehicle to service. Failure to do so will cause initial steering response to be slow and heavy; unwanted pump and gear wear can also result.

The purging procedure is as follows:

1. Fill steering reservoir with Dexron III fluid. Allow level to stabilize between HOT and COLD marks.
2. Run engine at curb idle speed for 30-60 seconds. Then stop engine and add fluid if necessary.
3. Raise and support vehicle front end.
4. Run engine at curb idle speed and slowly turn steering left and right. Turn wheel about 1-1/2 turns in each direction.

***CAUTION**: Do not turn the steering wheel far enough to contact either steering stop, and never hold the wheel against the stops. This action can result in pump damage.*

5. Continue turning wheel back and forth until fluid is free of bubbles and level has stabilized.
6. Stop engine, remove supports and lower vehicle.
7. Check reservoir fluid level. If fluid is now hot, fill to HOT mark. If fluid is still cool or just warm set level at or just above COLD mark.

NOTE: If the fluid appears slightly foamy, simply allow it to stand a few minutes before checking and adjusting fluid level.

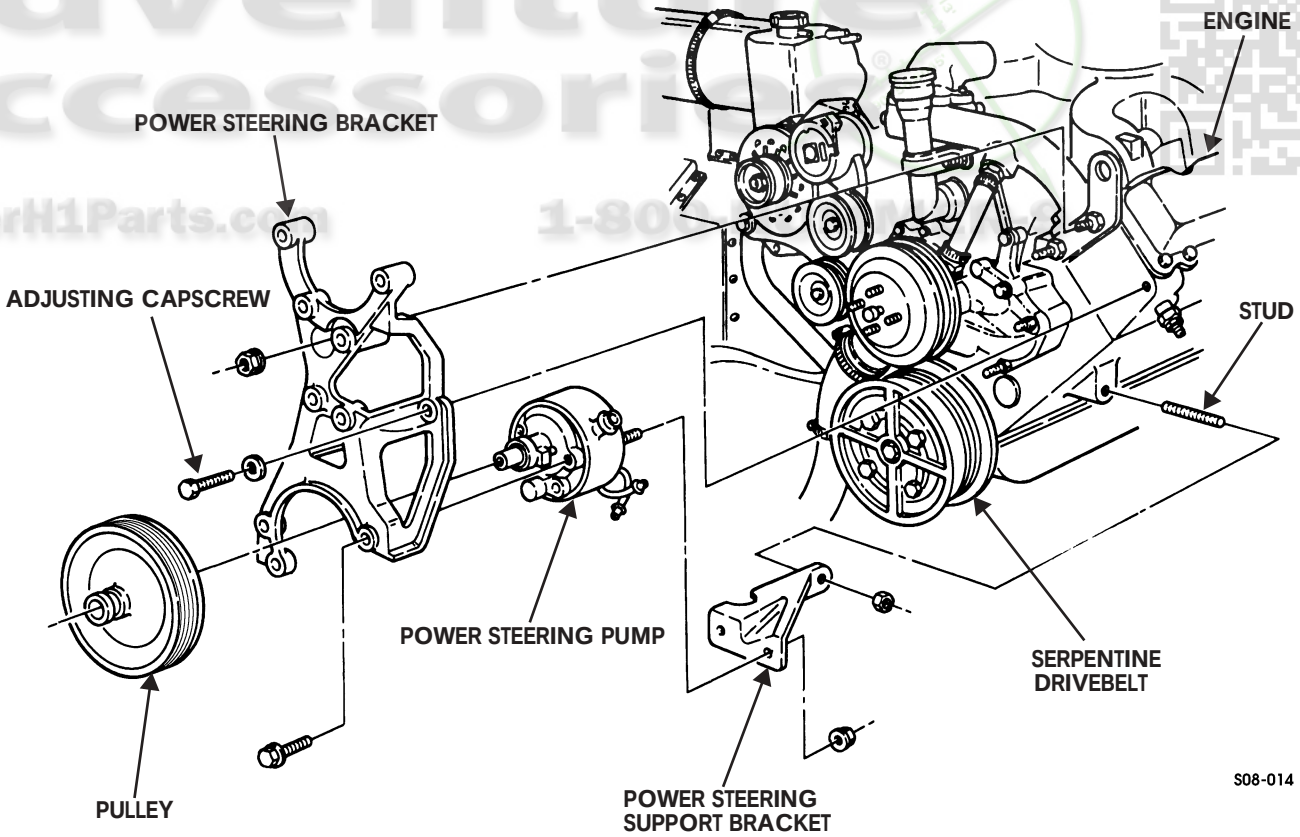

Figure 8-23: Power Steering Pump Assembly

POWER STEERING FLUID RESERVOIR REPLACEMENT

Removal

1. Disconnect hose from the power steering fluid reservoir and drain the power steering fluid before removing reservoir.
2. Remove two bolts, lockwashers, and washers from the mounting bracket. Remove the power steering fluid reservoir from the fan shroud assembly. Discard lockwashers (Figure 8-24).

Installation

1. Mount the power steering fluid reservoir to the fan shroud assembly using the mounting bracket, two bolts, lockwashers, and washer.
2. Connect the hose to the power steering fluid reservoir and fill with power steering fluid.

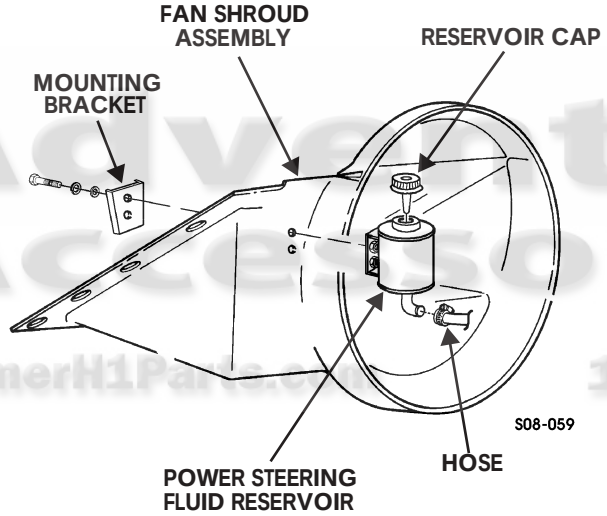

Figure 8-24: Power Steering Fluid Reservoir

POWER STEERING HYDRAULIC SYSTEM PRESSURE AND RETURN HOSE REPLACEMENT

NOTE: Removal and installation procedures are basically the same for all hydraulic system pressure and return hoses. This procedure covers the power steering pump to hydro-boost return hose and the steering gear to hydro-boost pressure hose.

Removal

1. Disconnect battery ground cable.
2. Disconnect return hose from power steering pump and hydro-boost (Figures 8-22 and 8-25).
3. Remove locknut, washer, capscrew, and two clamps from control valve hose and return hose. Discard locknut (Figure 8-25).
4. Remove locknut, two washers, and capscrew securing two clamps and harness clamp to power steering line bracket.
5. Disconnect pressure hose from hydro-boost and steering gear and remove pressure hose. Remove two O-ring seals from pressure hose. Discard O-ring seals (Figures 8-25 and 8-26).

Installation

1. Install two O-ring seals on pressure hose and connect pressure hose to steering gear and hydro-boost (Figure 8-26).
2. Connect return hose to power steering pump and hydro-boost with two clamps (Figures 8-22 and 8-25).
3. Install two clamps on return hose and control valve hose. Secure return hose, control valve hose, and two clamps together with capscrew, washer, and locknut (Figure 8-25).
4. Install harness clamp and two clamps on power steering lines bracket with capscrew, two washers, and locknut.
5. Connect battery ground cable.
6. Purge air from power steering system.

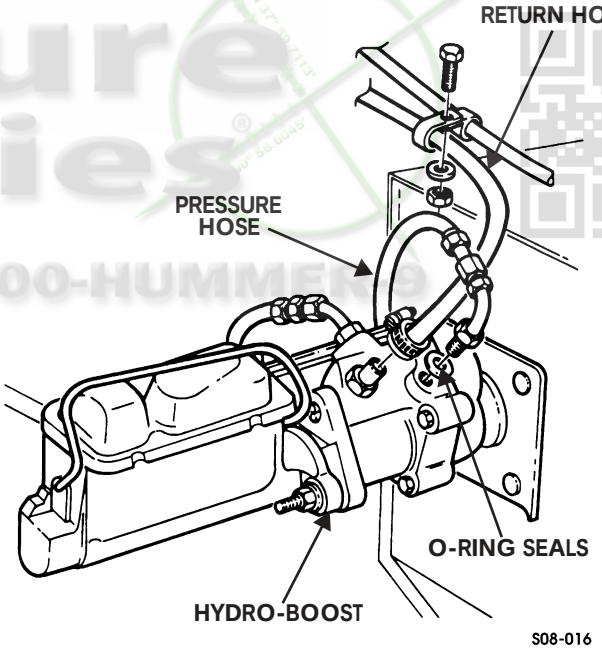

Figure 8-25: Power Steering Hydro-Boost

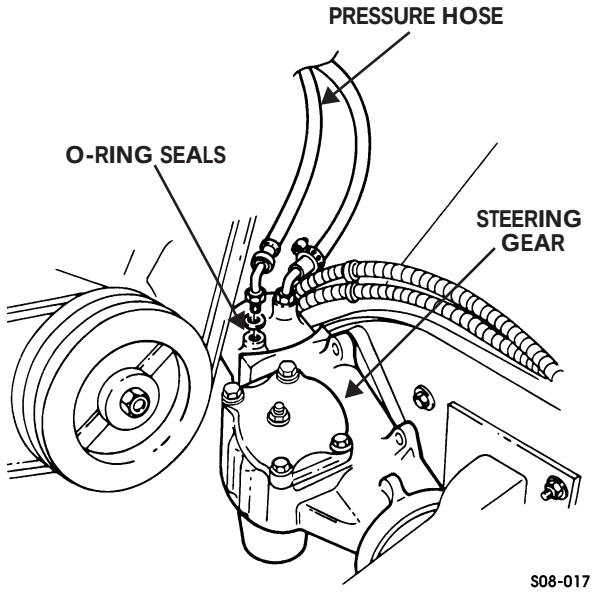

Figure 8-26: Hydro-Boost Hoses

POWER STEERING COOLER HOSE REPLACEMENT

Removal

1. Disconnect two hoses from cooler (Figure 8-27).
2. Remove tiedown strap securing oil cooler lines and two hoses. Discard tiedown strap.
3. Loosen clamp and remove hose from steering gear.
4. Loosen clamp and remove hose from power steering pump.

Installation

1. Connect hose to power steering pump and secure with clamp (Figure 8-27).
2. Connect hose to steering gear and secure with clamp.
3. Connect two hoses to cooler and secure with two clamps. Tighten clamps to 3-4 lb-ft (4-5 N•m).
4. Install tiedown strap to oil cooler lines and two hoses.
5. Purge air from power steering system.

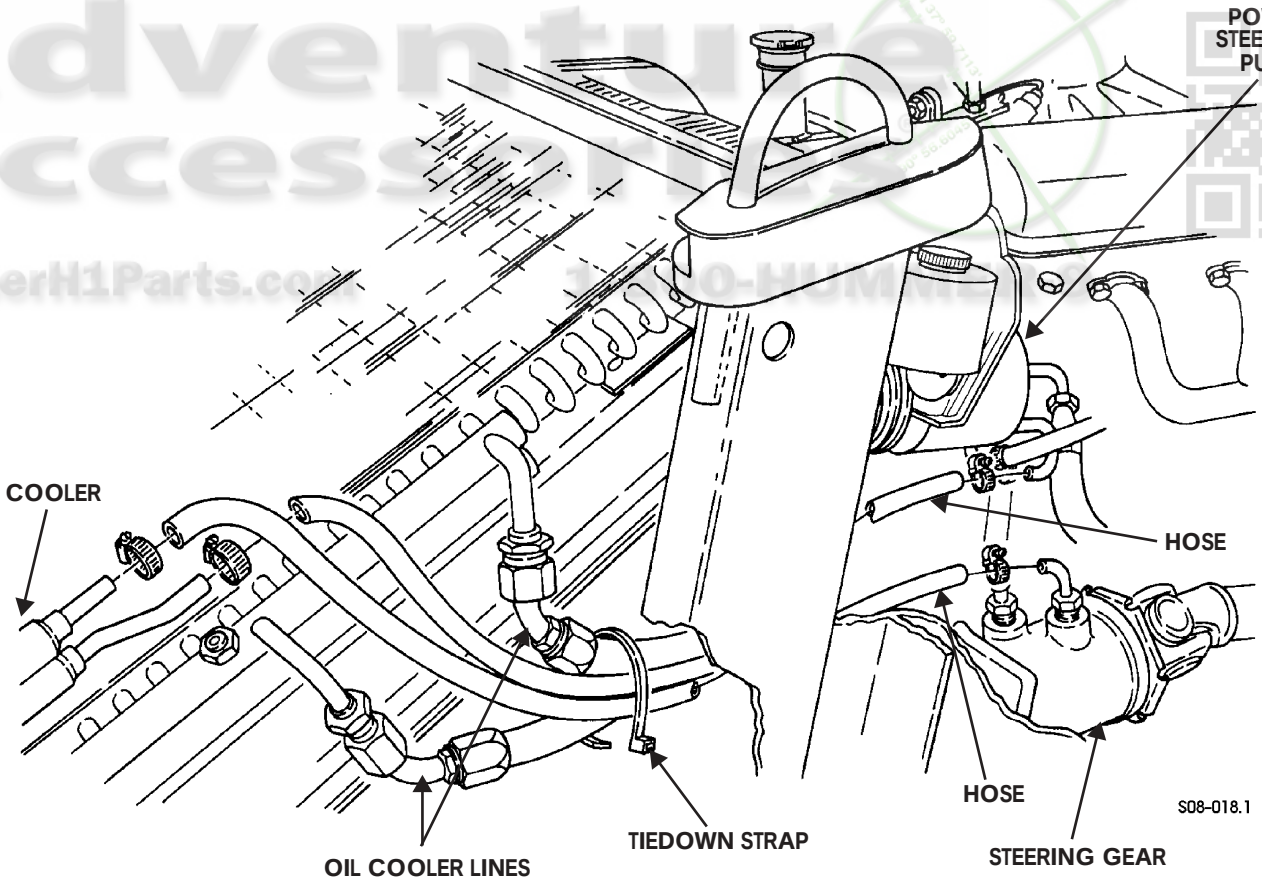

Figure 8-27: Power Steering Cooler Hose

POWER STEERING COOLER REPLACEMENT

Removal

1. Disconnect two hoses from power steering cooler (Figure 8-28).
2. Remove two screws, lockwashers, washers, and cooler from oil cooler. Discard lockwashers.

Installation

1. Install power steering cooler on oil cooler with two washers, lockwashers, and screws. Tighten screws to 10-13 lb-ft (14-18 N•m) (Figure 8-28).
2. Connect two hoses to cooler with two clamps. Tighten clamps to 3-4 lb-ft (4-5 N•m).
3. Purge air from power steering system.

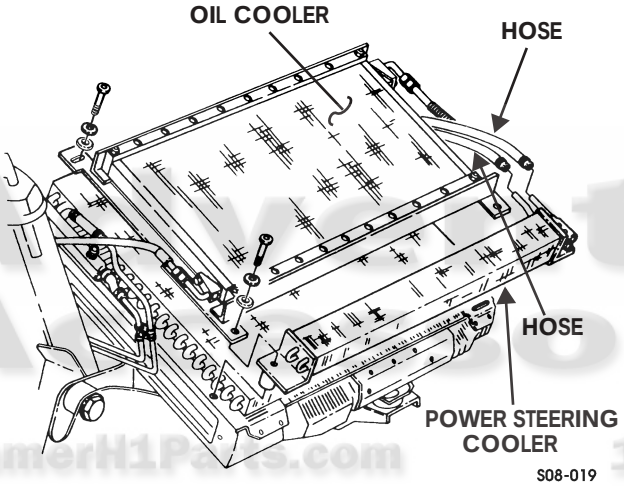

Figure 8-28: Power Steering Cooler

STEERING GEAR REPAIR

Disassembly

1. Remove steering gear.
2. Hold adjuster screw and remove lash adjuster nut (Figure 8-29).
3. Unscrew four capscrews securing side cover to housing.
4. Remove side cover from adjuster screw.
5. Remove gasket from side cover. Discard gasket.
6. Insert punch through access hole and remove retaining ring. Discard retaining ring.
7. Rotate stub shaft counterclockwise to force end plug from housing.
8. Rotate stub shaft clockwise and remove O-ring seal. Discard O-ring seal.
9. Remove plug from rack piston (Figure 8-30).

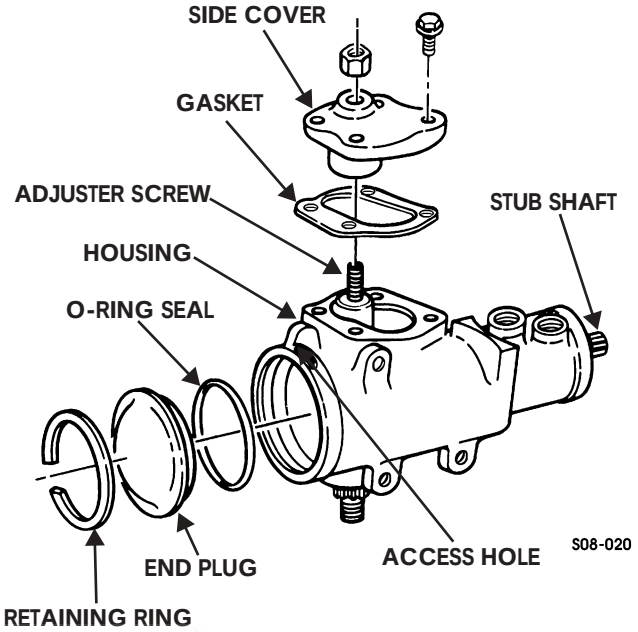

Figure 8-29: Steering Gear Assembly

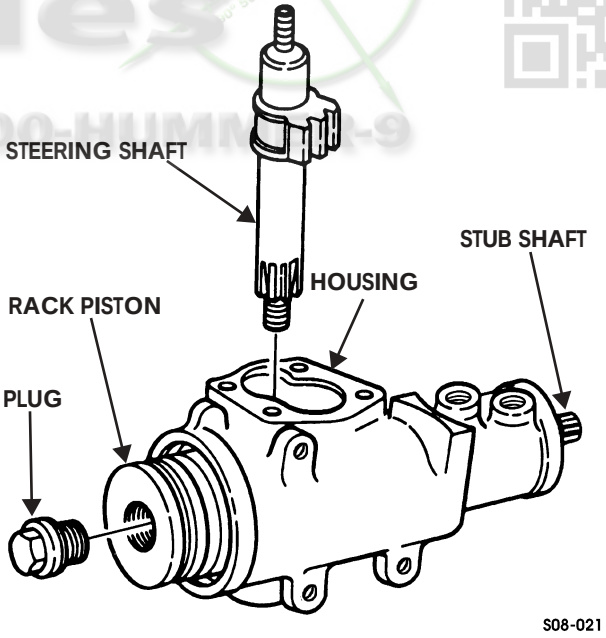

Figure 8-30: Steering Shaft in Steering Gear Housing

10. Rotate stub shaft to center and remove steering shaft from housing.
11. Insert rack piston arbor in rack piston and hold tightly while turning stub shaft counterclockwise (Figure 8-31).
12. Remove rack piston and rack piston arbor together from gear housing.

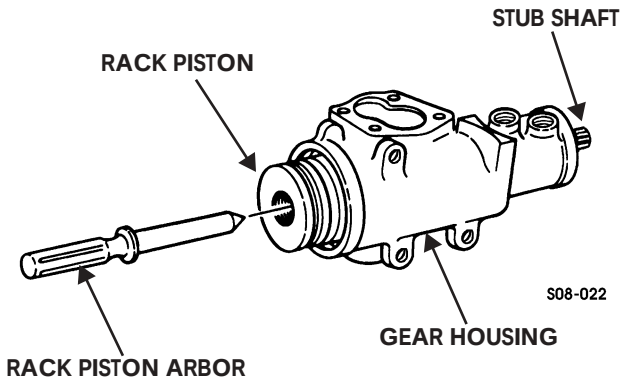

Figure 8-31: Rack Piston and Rack Piston Arbor

13. Remove locknut from adjuster plug (Figure 8-32).

NOTE: Worm and valve may come out with adjuster plug. If so, separate adjuster from worm and valve.

14. Using spanner wrench, remove adjuster plug from housing.

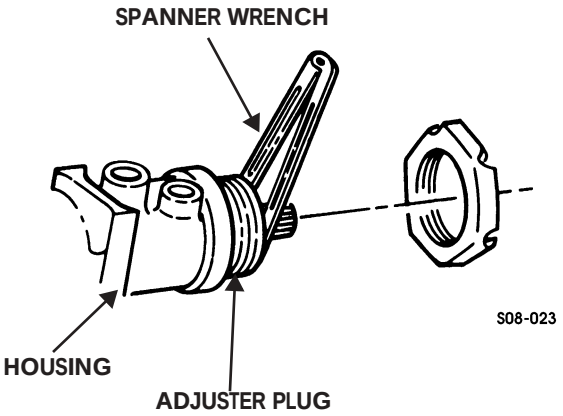

Figure 8-32: Adjuster Plug

15. Pry off bearing retainer at raised area (Figure 8-33).

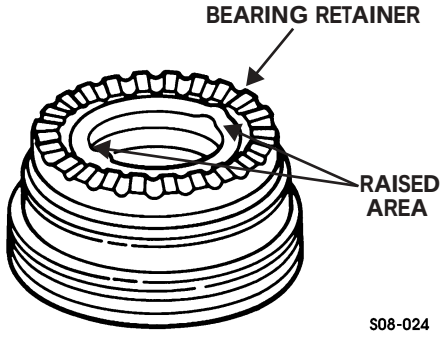

Figure 8-33: Bearing Retainer

16. Remove thrust bearing spacer, small bearing race, upper thrust bearing, and large bearing race (Figure 8-34).
17. Remove O-ring seal. Discard O-ring seal.
18. Remove retaining ring from opposite side of adjuster plug. Discard retaining ring.
19. Remove stub shaft dust seal and stub shaft oil seal. Discard stub shaft dust seal and stub shaft oil seal.

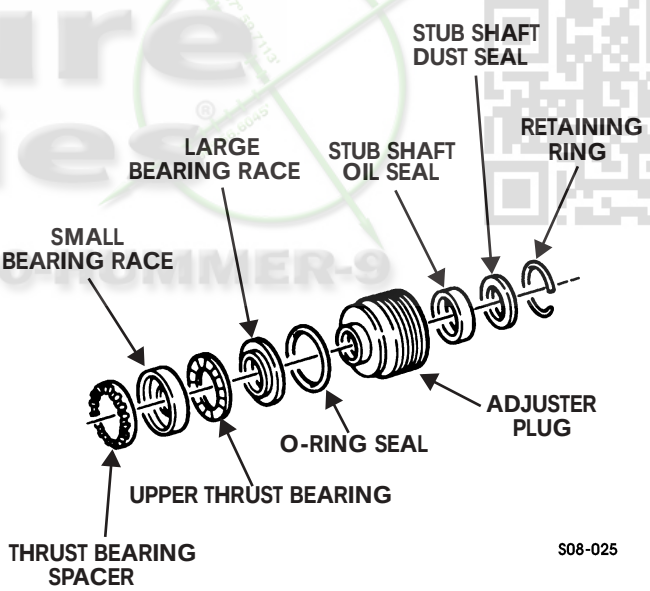

Figure 8-34: Adjuster Plug Assembly

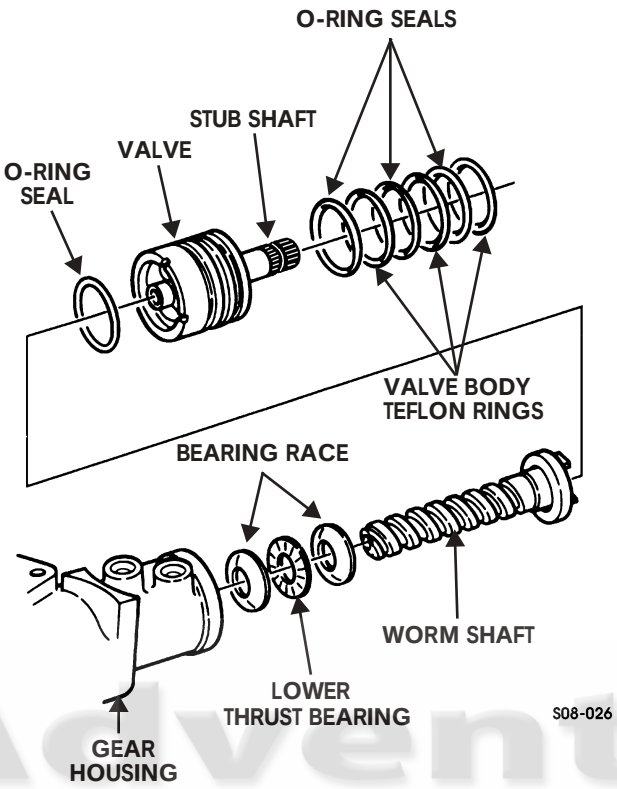

Figure 8-35: Worm Shaft Assembly

20. Hold stub shaft and remove valve and worm shaft together from gear housing (Figure 8-35).
21. Remove bearing race, lower thrust bearing, and bearing race from worm shaft.
22. Clamp worm shaft in soft-jawed vise and pull valve from worm shaft.
23. Remove and discard three valve body teflon rings and O-ring seals from valve body.
24. Remove stub shaft O-ring seal from valve body. Discard O-ring seal.
25. Tap splined end of stub shaft lightly on wood block until shaft cap is free of valve body (Figure 8-36).
26. Pull shaft outward 0.24 in. (6 mm).
27. Press locating pin inward and remove stub shaft from valve body

NOTE: Rotate spool to remove from valve body.

28. Remove spool from valve body.
29. Remove O-ring seal from spool. Discard O-ring seal.

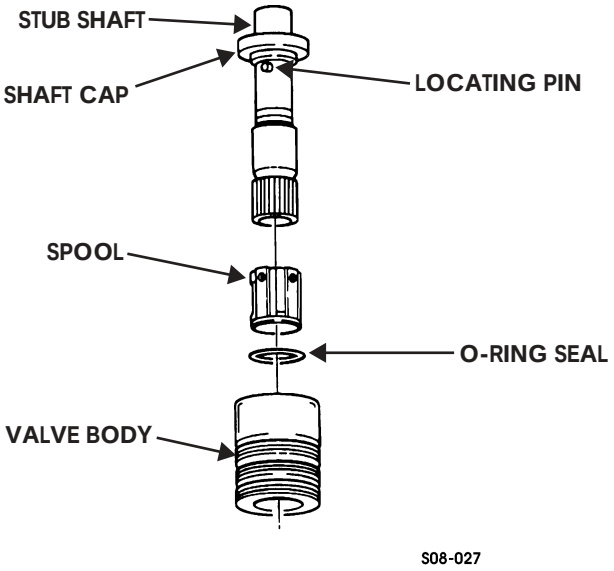

Figure 8-36: Stub Shaft

30. Remove two screw-assembled washers and clamp from rack piston (Figure 8-37).

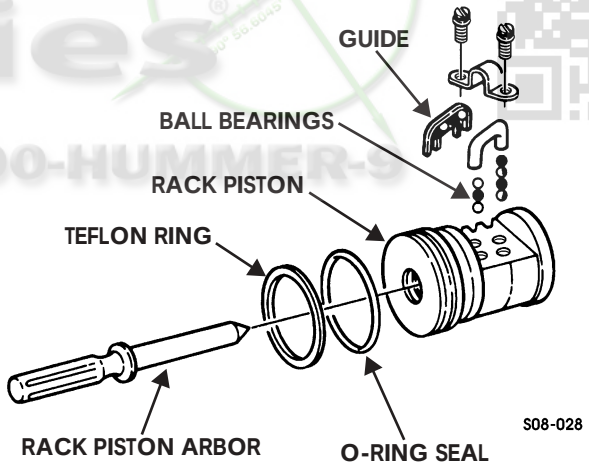

Figure 8-37: Rack Piston and Ring Seals

31. Remove and separate two halves of guide.
32. Remove black and chrome ball bearings.
33. Tip rack piston so remaining ball bearings fall out. The total number of ball bearings should be twenty-four, twelve black and twelve chrome-colored.
34. Remove rack piston arbor from rack piston.
35. Remove teflon ring and O-ring seal from rack piston. Discard teflon ring and O-ring seal.

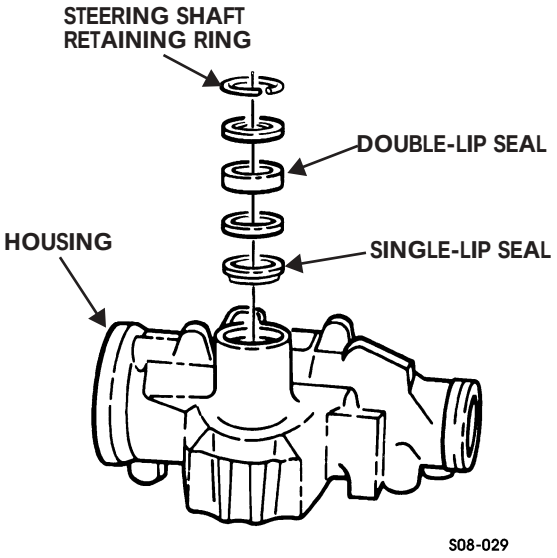

Figure 8-38: Steering Shaft Retaining Ring

36. Remove steering shaft retaining ring from housing. Discard retaining ring (Figure 8-38).
37. Remove washer, double-lip seal, washer, and single-lip seal from housing. Discard two seals and washers.

Cleaning

Clean all parts (Section 1).

Housing Group Cleaning, Inspection, and Repair

NOTE: Clean all components, examine for wear or damage, and replace if necessary.

1. Inspect housing for cracks, chipped or broken retaining ring grooves, and damaged sealing surfaces. Replace steering gear if housing is damaged (Figures 8-39 and 8-41).

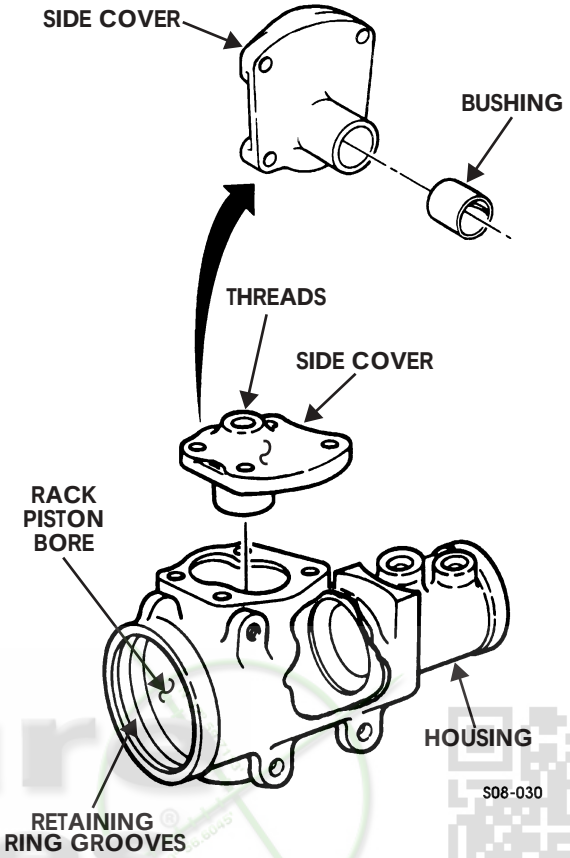

Figure 8-39: Steering Gear Housing Assembly

2. Inspect housing for crossed or stripped threads. Repair if necessary (Section 1). Replace steering gear if housing threads cannot be repaired.
3. Inspect needle bearing for damage or wear. Replace needle bearing if damaged or inside diameter is worn below 1.25 in. (31.750 mm). If damaged or worn, replace needle bearing as follows (Figure 8-40).

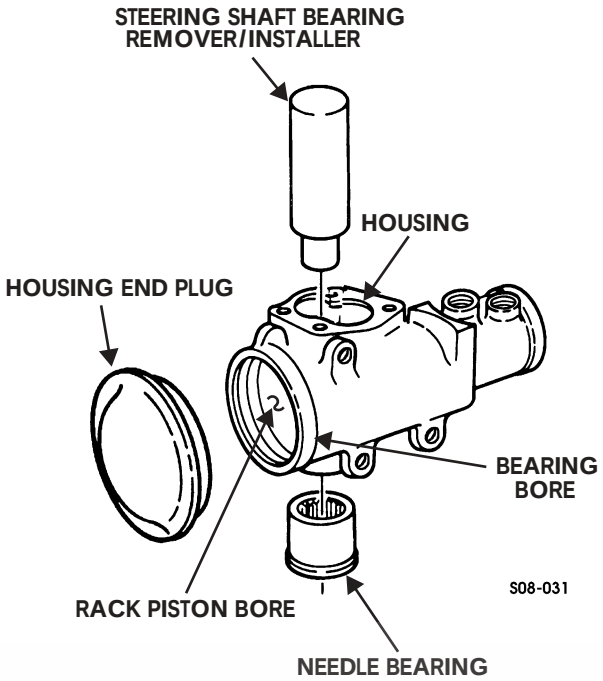

Figure 8-40: Needle Bearing

a. Using steering shaft bearing remover/ installer, remove bearing from housing.

b. Lubricate bearing bore and bearing with hydraulic fluid.

c. Using steering shaft bearing remover/ installer and adapter ring, install bearing until seated in housing (Figure 8-41).

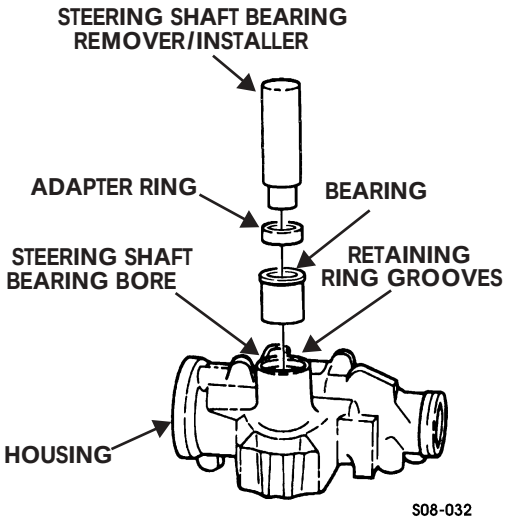

Figure 8-41: Steering Shaft Bearing

4. Inspect valve bore, rack piston bore, worm shaft support bore, and steering shaft bearing bore for rust, pitting, scoring, galling, and wear. Wear limits for bore I.D. are: valve bore 2.033 in. (51.64 mm) and rack piston bore 3.128 in. (79.45 mm.) Remove minor rust, pitting, and scoring with crocus cloth. If bore(s) does not meet specifications, or if there is other unrepairable damage, replace steering gear (Figures 8-39, 8-40, 8-41, 8-42, and 8-43).

5. Inspect check valve for freedom of movement. If damaged, replace. Check valve as follows (Figure 8-42):

   a. Pry check valve out of housing with a small screwdriver.

   b. Lubricate housing and check valve with hydraulic fluid.

   c. Install check valve using 0.375 in. (9.52 mm) outside diameter (O.D.) tubing, 4 in. (10.16 cm) long.

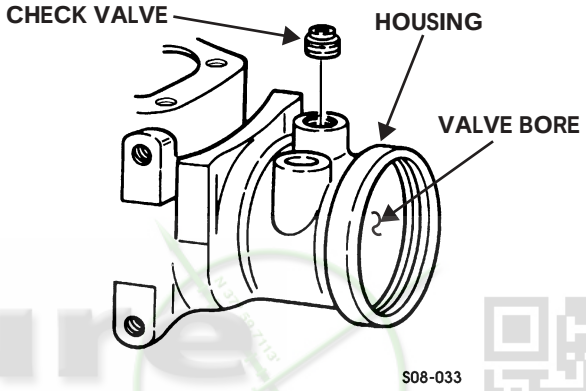

Figure 8-42: Check Valve

6. Inspect side cover for breaks, cracks, stripped or crossed threads, warped or damaged sealing surface, and scored or worn bushing. Repair minor scoring and thread damage. Replace side cover if bushing is worn through or loose in bore. Replace bushing if I.D. is worn over 1.249 in. (31.70 mm) (Figure 8-39).

7. Inspect housing end plug for cracks, and chipped edges. Replace housing end plug if damaged (Figure 8-40).

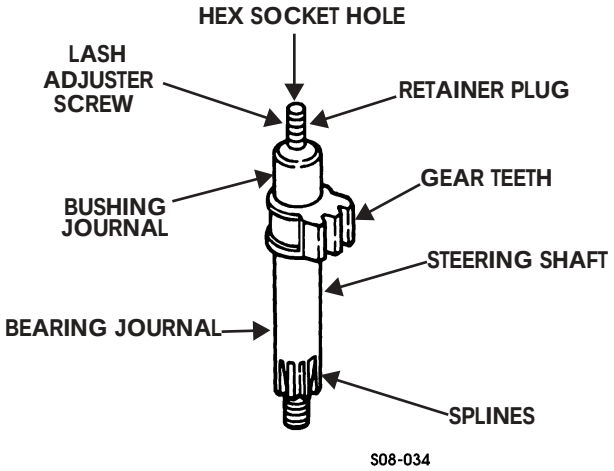

Figure 8-43: Steering Shaft Assembly

Steering Shaft Cleaning, Inspection, and Repair

NOTE: Clean all components, examine for wear or damage, and replace if necessary.

1. Inspect steering shaft for breaks, chipped, cracked, or broken gear teeth, wear on bushing journal or bearing journal, crossed or stripped threads, and bent or twisted splines. Bushing journal minimum O.D. is 1.2480 in. (31.699 mm) and bearing journal minimum O.D. is 1.25 in. (31.750 mm). Repair minor thread damage. Replace steering shaft if worn or unrepairable (Figure 8-43).
2. Inspect lash adjuster screw for free rotation in shaft, tight retainer plug, crossed or stripped threads, and rounded hex socket hole. Repair minor thread damage. Replace steering shaft if damaged.

Rack Piston Group Cleaning, Inspection, and Repair

NOTE: Clean all components, examine for wear or damage, and replace if necessary. If rack piston internal worm thread, worm thread, or ball bearings are broken, chipped, or moderately or badly scored, replace all three parts.

1. Inspect rack piston for breaks, burrs, chipped seal grooves, crossed or stripped threads, cracked or broken gear teeth, and broken, chipped or scored internal worm thread. Repair minor burrs and scoring with fine mill file or crocus cloth. Repair minor thread damage. Replace rack piston if gear teeth are cracked or broken or other damage is unrepairable (Figure 8-44).
2. Inspect twenty-four ball bearings for breaks, chipped surface, flats, and scoring. Minor scoring on ball bearings is acceptable. Replace ball bearings as a set if any one or more fails inspection.
3. Inspect ball bearing guides and clamp for bends, dents, and breaks. Replace damaged parts.
4. Inspect screw-assembled washers for crossed or stripped threads. Replace screw-assembled washers if damaged.
5. Inspect rack piston plug for burred or rounded hex, flats, and stripped or crossed threads. Replace rack piston plug if damaged.

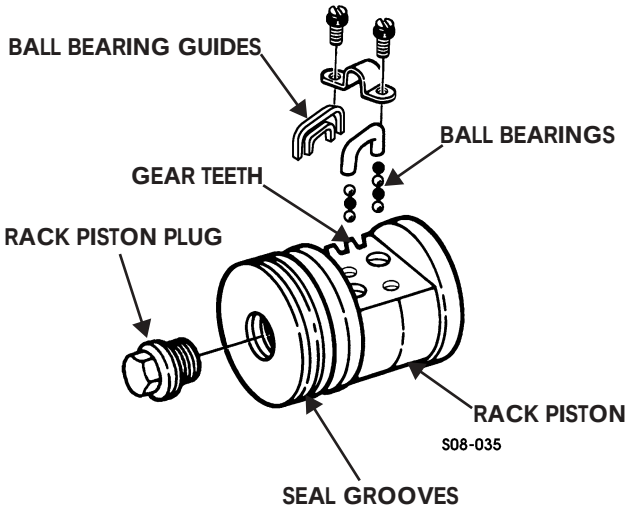

Figure 8-44: Rack Piston

Valve and Adjuster Group Cleaning, Inspection, and Repair

NOTE: Clean all components, examine for wear or damage, and replace if necessary.

1. Inspect valve body for burrs, chipped or broken seal ring grooves, scoring or inner bore wear. Repair minor burrs and scoring with crocus cloth. Valve body bore maximum I.D. is 1.1557 in. (29.355 mm) and valve body minimum O.D. is 2.0150 in. (51.181 mm). Replace valve body if worn or unrepairable (Figure 8-45).

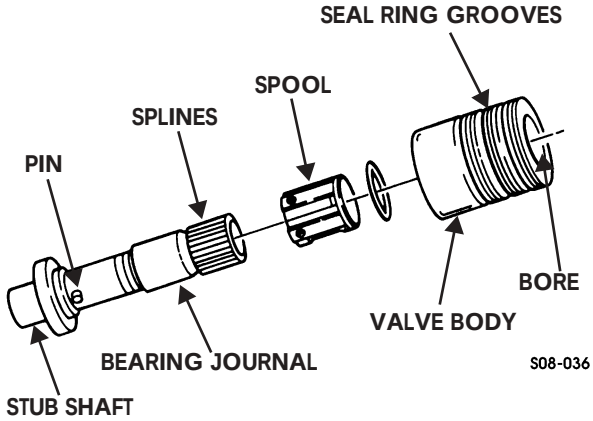

Figure 8-45: Valve Body

2. Inspect spool for burrs, cracks, blocked oil passages, chipped or cracked seal ring groove, scoring, and wear. Spool minimum O.D. is 1.152 in. (29.26 mm). Remove minor burrs and scoring with crocus cloth and clear blocked oil passages. Replace spool if worn or unrepairable.

3. Inspect stub shaft for bends, cracks, breaks, damaged pin, bent or twisted splines, and worn bearing journal. Bearing journal minimum O.D. is 1.2495 in. (31.623 mm). Replace stub shaft if worn or damaged.
4. Inspect worm for bends, breaks, burrs, chipped threads, and scoring. Remove minor burrs and scoring with fine mill file or crocus cloth. Replace worm if damage is unrepairable (Figure 8-46).

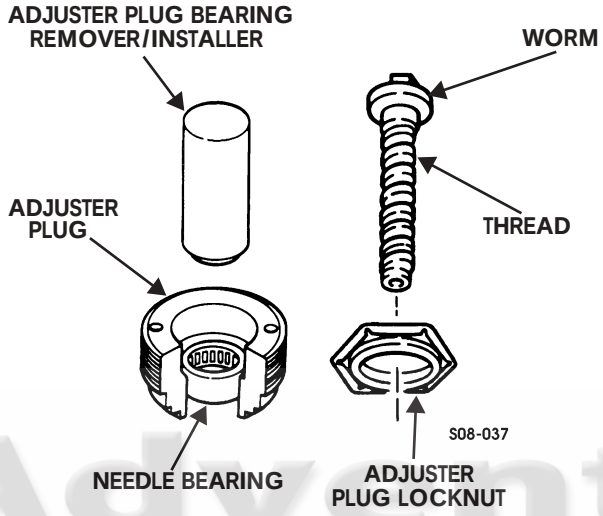

Figure 8-46: Worm Shaft Assembly

5. Inspect adjuster plug for cracks, breaks, crossed or stripped threads, chipped retainer grooves, and seal ring surface. Replace plug if damaged.
6. Inspect adjuster plug needle bearing for damage and wear. Replace needle bearing if damaged or I.D. is worn over 1.2550 in. (31.877 mm). If damaged or worn, replace needle bearing as follows:
   a. Using adjuster plug bearing remover/installer, remove bearing from adjuster plug.
   b. Lubricate adjuster plug and bearing with hydraulic fluid.
   c. Using adjuster plug bearing remover/ installer, install bearing 0.630 in. (16 mm) deep in adjuster plug.
7. Inspect adjuster plug locknut for cracks, burred flats or notches, and stripped or crossed threads. Replace locknut if damaged.

NOTE: Outer edge of bearing retainer is marked with identification number.

8. Inspect bearing retainer, thrust bearing spacer, small race, upper thrust bearing, and large race for damage. Replace all items if one item is damaged (Figure 8-47).

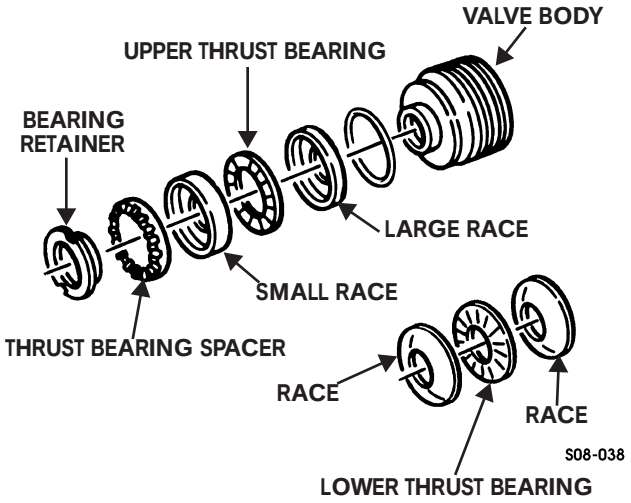

Figure 8-47: Bearing Retainer

9. Inspect lower thrust bearing and two races for damage. Replace all items if any one is damaged.

Assembly

NOTE: For general assembly instructions refer to Section 1.

1. Using steering shaft bearing remover/installer and adapter ring, install single-lip seal and one washer in housing only far enough to provide clearance for next seal and washer (Figure 8-48).
2. Using steering shaft bearing remover/installer and adapter ring, install seal and second washer in housing only far enough to provide clearance for retaining ring.
3. Install retaining ring in housing.

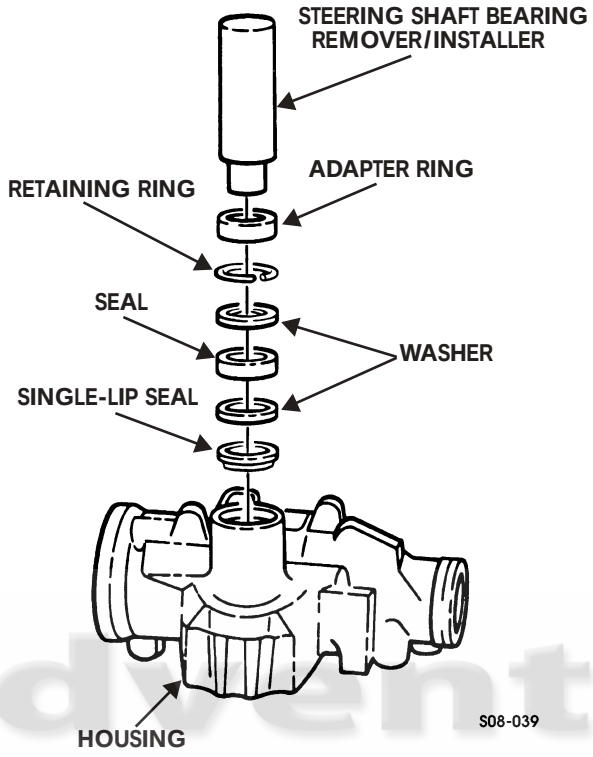

Figure 8-48: Steering Gear Housing

NOTE: Soak teflon ring in warm water to ease assembly.

4. Install O-ring seal and teflon ring on rack piston (Figure 8-49).

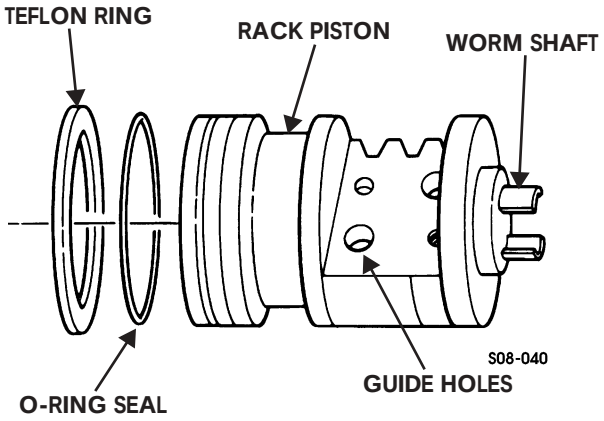

Figure 8-49: Rack Piston With Teflon Ring

5. Install worm shaft in rack piston.
6. Align lower ball return guide hole with worm shaft groove.
7. Alternately install eight black and chrome ball bearings into lower guide hole while rotating worm shaft counter-clockwise (Figure 8-50).

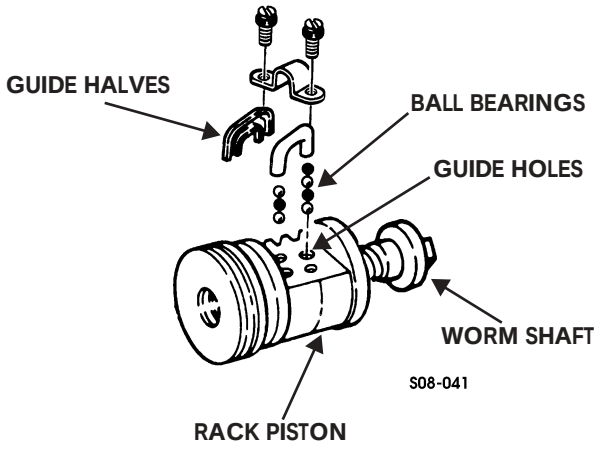

Figure 8-50: Worm Shaft

NOTE: Keep ball bearings in alternating sequence when installing guide in rack piston. Ensure a total of 24 ball bearings are installed.

8. Install eight remaining ball bearings in guide half and retain with grease.
9. Assemble both guide halves together and install guide in guide holes.
10. Secure clamp over guide with two screw-assembled washers. Tighten screw-assembled washers to 4 lb-ft (5 N•m).
11. Rotate worm shaft clockwise until flush with rack piston (Figure 8-51).

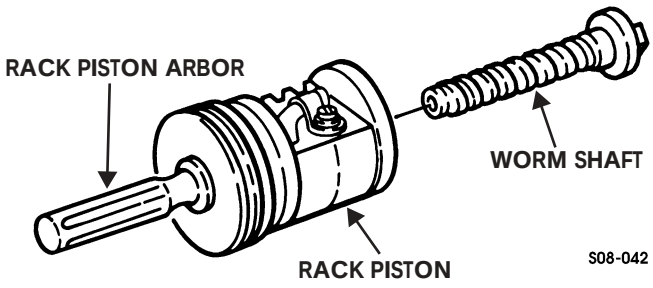

Figure 8-51: Worm Shaft and Rack Piston

12. Install rack piston arbor into rack piston and hold firmly against worm shaft. Remove worm shaft.

NOTE: Soak teflon rings in warm water to ease assembly.

13. Starting on inner seal ring groove, install O-ring seal and a backup teflon ring on valve body (Figure 8-52).

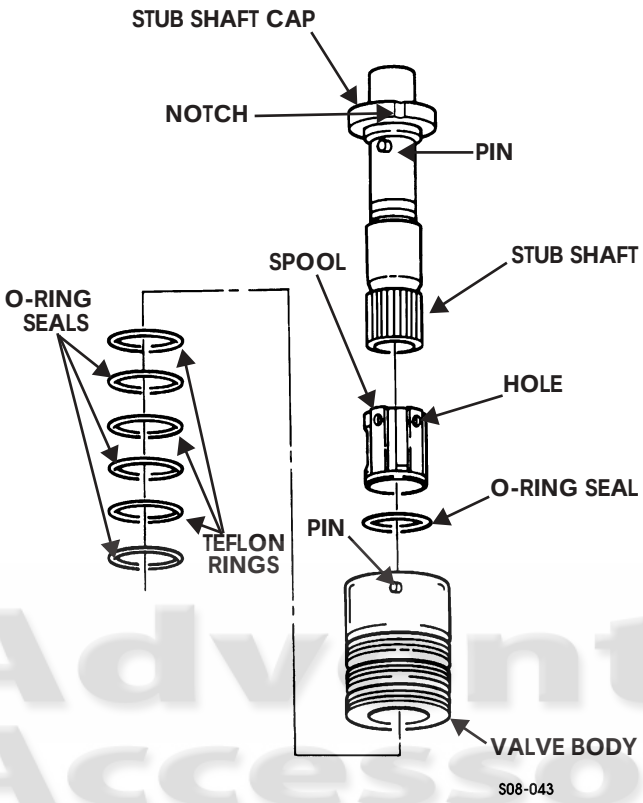

Figure 8-52: Valve Body Assembly With Stub Shaft

14. Repeat step 13 for innermost seal ring groove and install two remaining O-ring seals and teflon rings on valve body.

NOTE: Rotate spool to install in valve body.

15. Install O-ring seal on spool and install spool into valve body until flush with notched end of valve body.
16. Install stub shaft in spool so pin on stub shaft engages hole in spool.
17. Align notch in stub shaft cap with pin in valve body and press stub shaft and spool into valve body.
18. Install O-ring seal in valve (Figure 8-53).
19. Install worm shaft into valve.
20. Engage locating pin on worm shaft with slot in valve.
21. Install lower thrust bearing race, lower thrust bearing, and lower thrust bearing race on worm shaft.
22. Install assembled valve and worm shaft into housing.
23. Install O-ring seal, large upper bearing race, upper thrust bearing, small upper bearing race, thrust bearing spacer, and bearing retainer on adjuster plug. Press retainer onto adjuster plug with a brass drift (Figure 8-54).

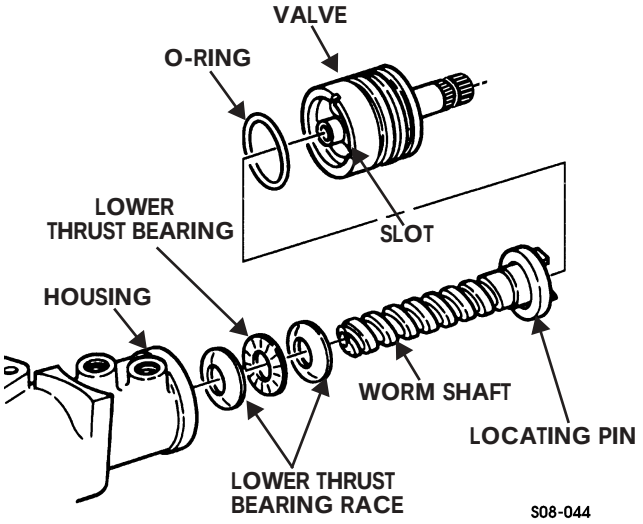

Figure 8-53: Worm Shaft Assembly

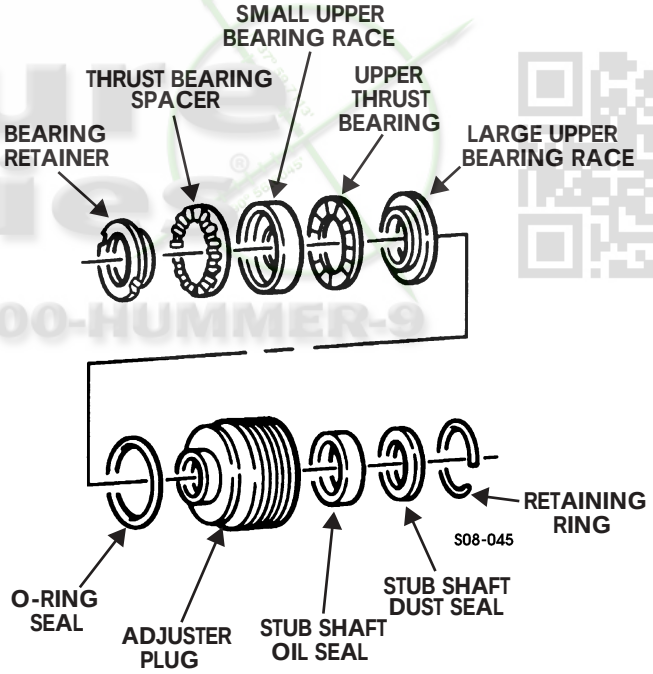

Figure 8-54: Adjuster Plug Assembly

NOTE: Coned surface of races face toward housing.

24. Install stub shaft oil seal in adjuster plug. Install far enough to provide clearance for stub shaft dust seal and retaining ring.
25. Install stub shaft dust seal and retaining ring in adjuster plug.
26. Using spanner wrench, install adjuster plug in housing. Do not tighten (Figure 8-55).
27. Install locknut over adjuster plug. Do not tighten.

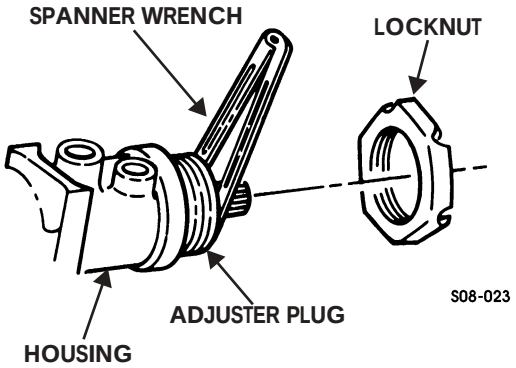

Figure 8-55: Adjuster Plug Housing

28. Install rack piston and rack piston arbor into gear housing so gear teeth on rack piston align with gear teeth on steering shaft (Figure 8-56).

29. Hold rack piston arbor tightly against rack piston while turning stub shaft clockwise. Remove piston arbor.
30. Install rack piston plug into rack piston. Do not tighten.
31. Center rack piston and install steering shaft in housing.

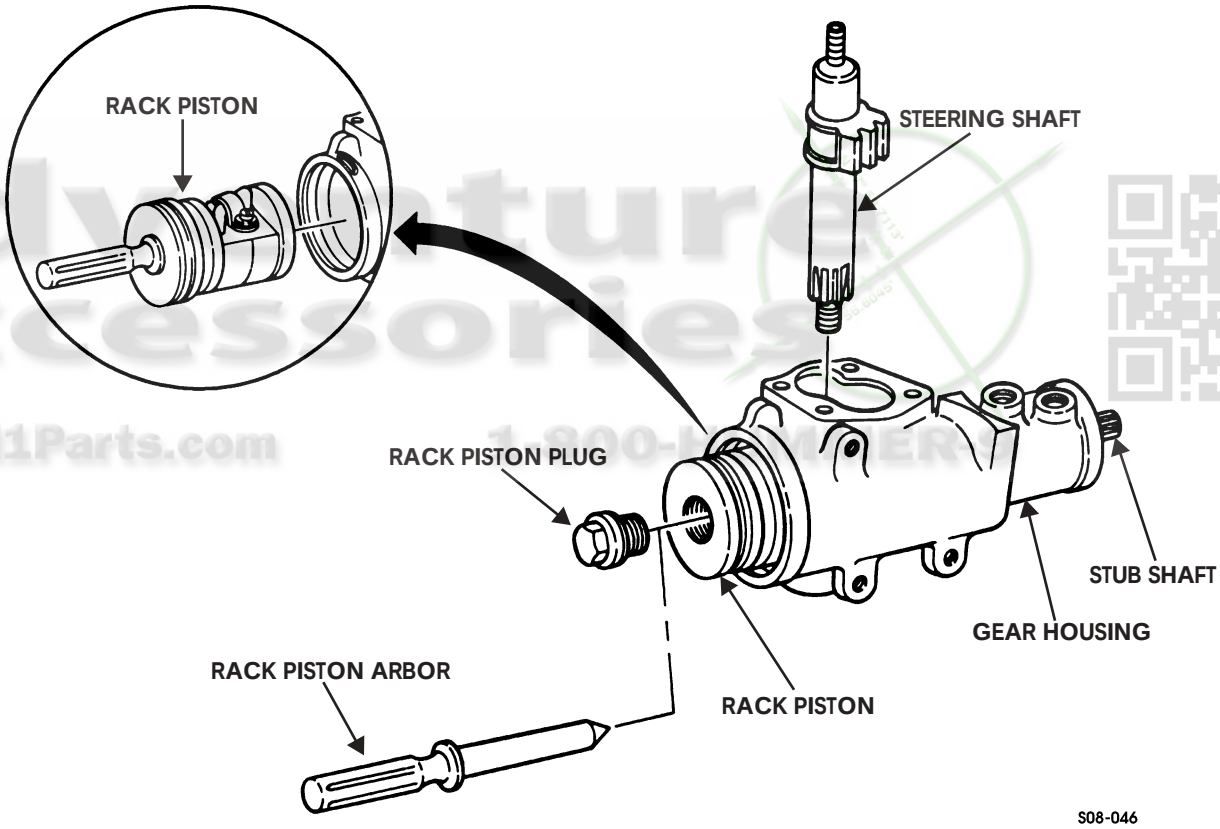

Figure 8-56: Rack Piston Plug and Steering Shaft Gear Housing

32. Tighten rack piston plug to 75 lb-ft (102 N•m).
33. Install O-ring seal and gear housing end plug in housing (Figure 8-57).

NOTE: Opening in retaining ring should be located approximately 1 in. (25 mm) from access hole.

34. Install retaining ring in gear housing.
35. Install side cover gasket on side cover by bending tabs around side cover edge.
36. Install screw side cover on adjuster screw.
37. Install four capscrews on side cover. Tighten capscrews to 40 lb-ft (54 N•m).
38. Install lash adjuster nut on steering shaft adjuster screw.

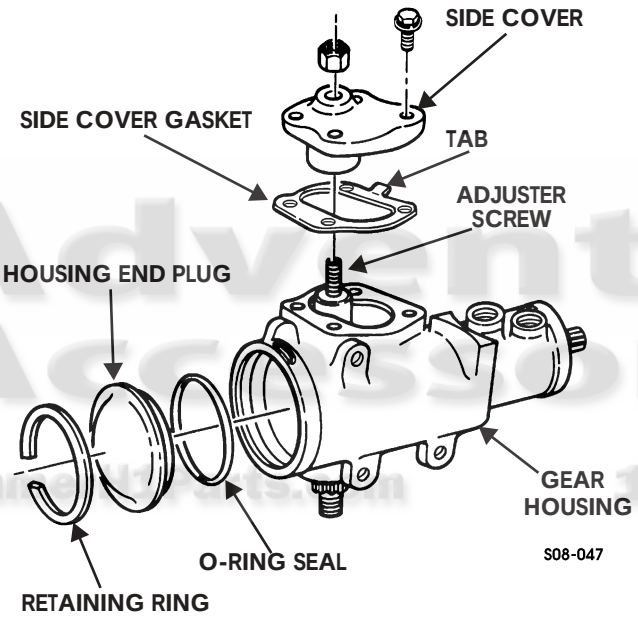

Figure 8-57: Gear Housing End Plug

Adjustment

1. For worm shaft bearing preload adjustment, remove locknut (Figure 8-58).

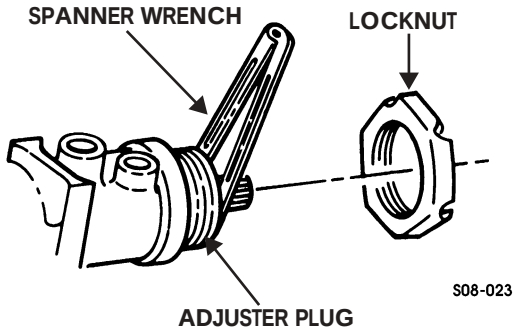

Figure 8-58: Adjuster Plug Into Gear Housing

2. Using spanner wrench, tighten adjuster plug clockwise until thrust bearing is firmly bottomed.
3. Match mark on housing and adjuster plug face (Figure 8-59).

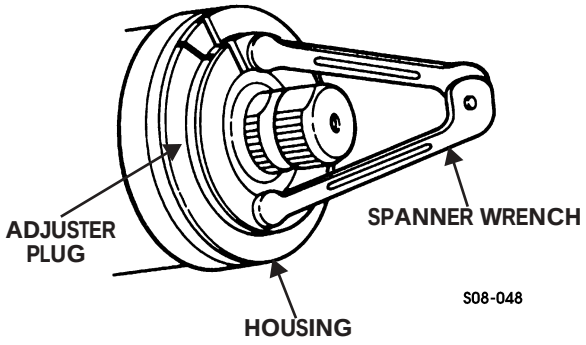

Figure 8-59: Housing and Adjuster Plug Faces

4. Measure back counterclockwise 0.5 in. (13 mm) and place second mark on housing.
5. Using spanner wrench, turn adjuster plug counterclockwise until mark on face of adjuster plug aligns with second mark on housing.
6. Install locknut on adjuster plug (Figure 8-58).
7. Hold adjuster plug using spanner wrench and tighten locknut (Figure 8-60).

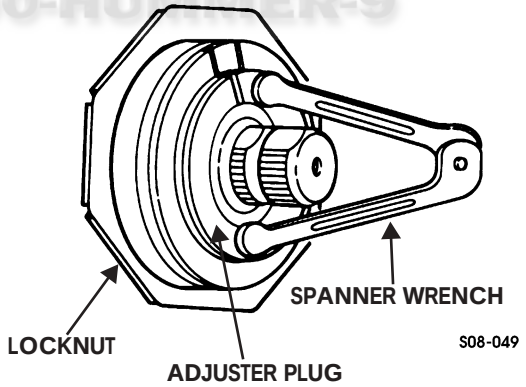

Figure 8-60: Tightening Locknut on Adjuster Plug

8. Turn stub shaft clockwise to stop, then back one-quarter turn (Figure 8-61).

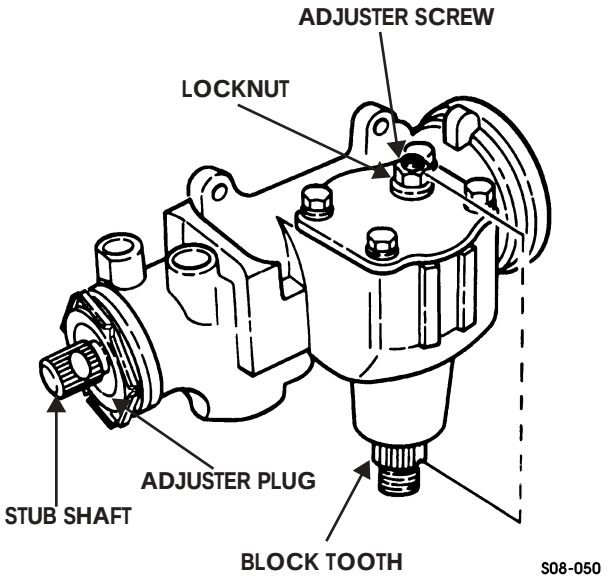

Figure 8-61: Stub Shaft

9. Check torque required to turn stub shaft. Reading should be 4.425-8.850 lb-in. (0.5-1 N•m).
10. If reading is not correct, turn adjuster plug in or out and repeat steps 7 through 9 until torque required to turn stub shaft is 4.425-8.850 lb-in. (0.5-1 N•m).
11. For steering shaft-over-center adjustment, loosen adjuster screw locknut.
12. Turn adjuster screw counterclockwise until fully extended, then turn clockwise one full turn.
13. Rotate stub shaft from stop-to-stop and count number of turns.
14. Back off stub shaft one-half number of turns counted.
15. Center gear flat on stub shaft so that it faces upward. Block tooth should be in line with adjuster screw.
16. With gear at center of travel, check torque to turn stub shaft.
17. Turn adjuster screw clockwise until torque for stub shaft is 6.195-8.850 lb-in. (0.7-1 N•m) more than reading obtained in step 16.
18. Hold adjuster screw and tighten locknut to 20 lb-ft (27 N•m).

THIS PAGE INTENTIONALLY BLANK.